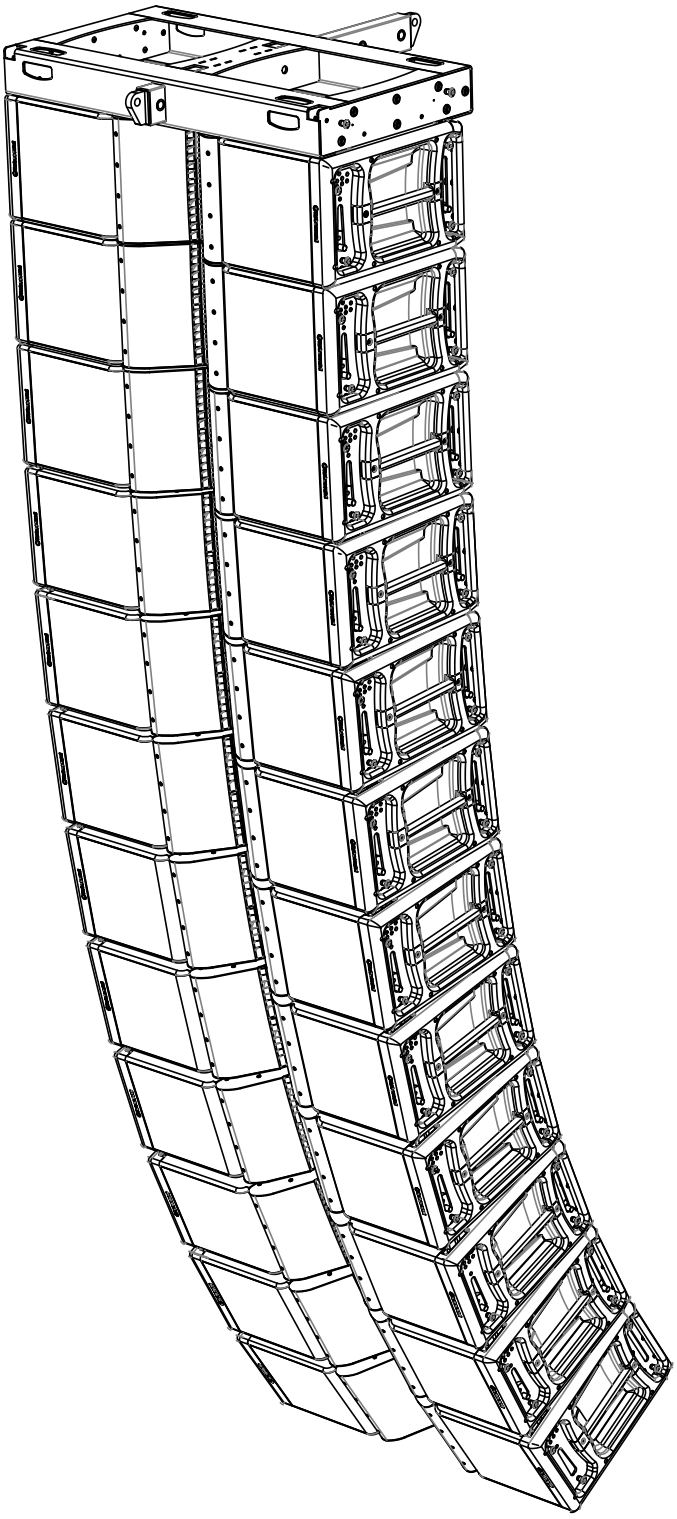

TFS-900 Flashline Loudspeaker System
User Manual

CONTENTS

1. Important Safety Instructions (Amplifiers)

Before using the device, be sure to carefully read the Safety Instructions. Keep this document with the device at all times.

1.1 Safety Instructions for 20000DP

- Read these instructions.
- Keep these instructions.
- Heed all warnings.
- Follow all instructions.
- Do not use this apparatus near water.
- Clean only with a dry cloth.
- Do not block any ventilation openings. Install in accordance with the manufacturer's instructions.
- Do not install near any heat sources such as radiators, heat registers, stoves, or other apparatus (including amplifiers) that produce heat.
- Do not defeat the safety purpose of the polarized or grounding-type plug. A polarized plug has two blades with one wider than the other. A grounding-type plug has two blades and a third grounding prong. The wide blade or the third prong is provided for your safety. If the provided plug does not fit into your outlet, consult an electrician for replacement of the obsolete outlet.
- Protect the power cord from being walked on or pinched, particularly at plugs, convenience receptacles, and the point where they exit from the apparatus.
- Only use attachments/accessories specified by the manufacturer.
- Unplug this apparatus during lightning storms or when unused for long periods of time.
- Refer all servicing to qualified service personnel. Servicing is required when the apparatus has been damaged in any way, such as power-supply cord or plug is damaged, liquid has been spilled or objects have fallen into the apparatus, the apparatus has been exposed to rain or moisture, does not operate normally, or has been dropped.
- Use the mains plug to disconnect the apparatus from the mains.
- WARNING: To reduce the risk of fire of electric shock, do not expose this apparatus to rain or moisture.
- Do not expose this equipment to dripping or splashing and ensure that no objects filled with liquids, such as vases, are placed on the equipment.
- The mains plug of the power supply cord shall remain readily operable.
- Do not connect the unit's output to any other voltage source, such as battery, mains source, or power supply, regardless of whether the unit is turned on or off.
- Do not remove the top (or bottom) cover. Removal of the cover will expose hazardous voltages. There are no user serviceable parts inside and removal may void the warranty.
- An experienced user shall always supervise this professional audio equipment, especially if inexperienced adults or minors are using the equipment.
- The US National Differences clause 16.3 requires that network cables must be flame rated VW-1.
- To prevent electric shock do not remove top or bottom covers. No user serviceable parts inside, refer servicing to qualified service personnel.
- *à prévenir le choc électrique n'enlevez pas les couvercles. Il n'y a pas des parties serviceable à l'intérieur, tous reparations doit etre faire par personnel qualifié seulment.*
- To completely disconnect this equipment from the AC mains, disconnect the power supply cord plug from the AC receptacle. The mains plug of the power supply cord shall remain readily operable.
- *Pour démonter complètement l'équipement de l'alimentation générale, démonter le câble d'alimentation de son réceptacle. La prise d'alimentation restera aisément fonctionnelle.*

1.2 Standards

This equipment conforms to the requirements of the EMC Directive 2004/108/EC and the requirements of the Low Voltage Directive 2006/95/EC. Standards applied: EMC Emission, EN55103-1, E3, EMC Immunity EN55103-2, E3, with S/N below 1% at normal operation level. Electrical Safety EN60065, Class I

This equipment is tested and listed according to the U.S. safety standard ANSI/ UL 60065 and Canadian safety standard CSA C22.2 NO. 60065. Intertek made the tests and they are a Nationally Recognized Testing Laboratory (NRTL).

1.3 Explanation of Graphical Symbols

The lightning bolt triangle is used to alert the user to the presence of un-insulated “dangerous voltages” within the unit’s chassis that may be of sufficient magnitude to constitute a risk of electric shock to humans.

The exclamation point triangle is used to alert the user to presence of important operating and service instructions in the literature accompanying the product.

1.4 Warning

To reduce risk of fire or electric shock, do not expose this apparatus to rain or moisture.
Pour réduire les risques de blessure ou le choc électrique, n’exposez pas l’appareil à la pluie ou à l’humidité.

Do not expose this system/apparatus to dripping or splashing and ensure that no objects filled with liquids, such as vases, are placed on the apparatus.
L’appareil ne doit pas être exposé à des egouttements d’eau ou des éclaboussures et de plus qu’aucun objet rempli de liquide tel que des vases ne doit pas être placé sur l’appareil.

This apparatus must be connected to a mains socket outlet with a protective earthing connection.
Cet appareil doit être raccordé á une prise de courant qui est branchée à la terre.

The mains plug is used as a disconnect device and shall remain readily operable.
Lorsque la prise du réseau d’alimentation est utilisés comme dispositif de déconnexion, ce dispositif doit demeuré aisément accessible.

1.5 Caution

To reduce the risk of fire or electric shock, do not remove screws. No user-serviceable parts inside.
Refer servicing to qualified service personnel.
Pour réduire le risque d’incendie ou de choc électrique, ne pas retirer les vis. Aucune pièce réparable par l’utilisateur. Confier l’entretien àpersonnel qualifié.

1.6 FCC Compliance Notice (Radio Interference)

A sample of this product has been tested and complies with the limits for the European Electro Magnetic Compatibility (EMC) directive. This equipment has also been tested and found to comply with the limits for a Class B digital device, pursuant to Part 15 of the FCC Rules. These limits are designed to provide reasonable protection against harmful interference from electrical equipment. This product uses radio frequency energy and if not used or installed in accordance with these operating instructions, may cause interference to other equipment, such as radio receivers.

However, there is no guarantee that interference will not occur in a particular installation. If this equipment does cause harmful interference to radio or television reception, which can be determined by turning the equipment on and off, the user is encouraged to try to correct the interference by one or more of the following measures:

- Re-orient or relocate the antenna.
- Increase the separation between the equipment and receiver.
- Connect the equipment to an outlet on a circuit different from that to which the receiver is connected.

- Check if the affected unit complies with the EMC limits for immunity, (CE-labeled). If not, address the problem with the manufacturer or supplier. All electrical products sold in the EC must be approved for immunity against electromagnetic fields, high voltage flashes, and radio interference.
- Consult the dealer or an experienced radio/TV technician for help.

1.7 User Responsibility

1.7.1 Mains Connection Grounding

Your apparatus must be connected to a grounded socket outlet.

1.7.2 Speaker Output Hazard on Amplifiers

Amplifiers are capable of producing hazardous output voltages. To avoid electrical shock, do not touch any exposed speaker wiring while the amplifier is operating. The external wiring connected to the speaker terminals shall be installed by a qualified person, or ready-made leads or cords of appropriate capacity shall be used.

As the power output channels on amplifiers produce high voltage, do not connect or disconnect speaker cables when the mains power is on.

1.7.3 Speaker Damage

Amplifier apparatus is very powerful and can be potentially dangerous to both loudspeakers and humans alike. Many loudspeakers can be easily damaged or destroyed by overpowering them. Always check the speaker's continuous and peak power capabilities. Although the amplifiers attenuators can be used to reduce the overall gain, an increase of the input signal can result in full output power, which may cause damage to connected speakers.

1.7.4 Maintenance

For safe and reliable operation, the dust filter on should be removed and cleaned regularly to ensure maximum airflow through the device. If the dust filters are not maintained there will be safety risks; for example, high internal temperatures could ignite the dust and start a fire. There is also a risk that the unit will malfunction since it is dependent on constant airflow from front to rear.

If the dust filters are not clean and the unit malfunctions, any resulting problems will not be covered by the warranty.

2. Welcome

2.1 Introduction

Congratulations, you have purchased a professional loudspeaker product from the Flashline series of products. If you would like further information about this or any other TURBOSOUND product, please contact us on +44 (0)1403 711447.

Always check the Turbosound website for the latest updates on the technical documentation relating to this product at www.turbosound.com

2.2 Thanks

Thank you for choosing a TURBOSOUND product for your application. By engaging in an ongoing rigorous process of research and development all TURBOSOUND products are carefully engineered for world class performance and reliability.

2.3 Unpacking

After unpacking the unit please check carefully for damage. If damage is found, please notify your supplier at once. You, the consignee, must instigate any claim. Please retain all packaging in case of future re-shipment.

3. The Flashline System

The Flashline TFS-900 System is a complete, fully integrated, large scale, five-way two-box line array sound reinforcement system. It comprises mid/high and sub-bass loudspeakers, amplification and system control racks, flying hardware, and transport cases in a very powerful and space-efficient format.

The Flashline system is designed to allow integration of systems around the world with guaranteed 'out of the box' compatibility.

3.1 TFS-900H mid/high loudspeaker

The TFS-900H is a four-way line array module covering the frequency range above 70Hz and containing three 1" high frequency compression drivers loaded by Dendritic waveguides, two 6.5" high-mid cone transducers loaded by Polyhorns, four 6.5" horn-loaded low-mid cone transducers, and two 12" horn-loaded low frequency transducers.

The rigging hardware is integrated into the end-cheeks on each side of the TFS-900H cabinet, which also provide grab handle positions. Drop links at the front and rear of the box engage in the flygear of the box below it in the array to give a range of inter-cabinet angles from 0° to 5°. TFS-900H cabinets are normally transported four-up on the TFS-DOLLY and can be flown right off the dolly in blocks of four, with the rigging hardware already pre-configured for use. A simple TFS-GRID and TFS-TIP system is used to fly a typical array; no additional external parts are required to fly the system.

The cabinet is finished in black TourTough finish.

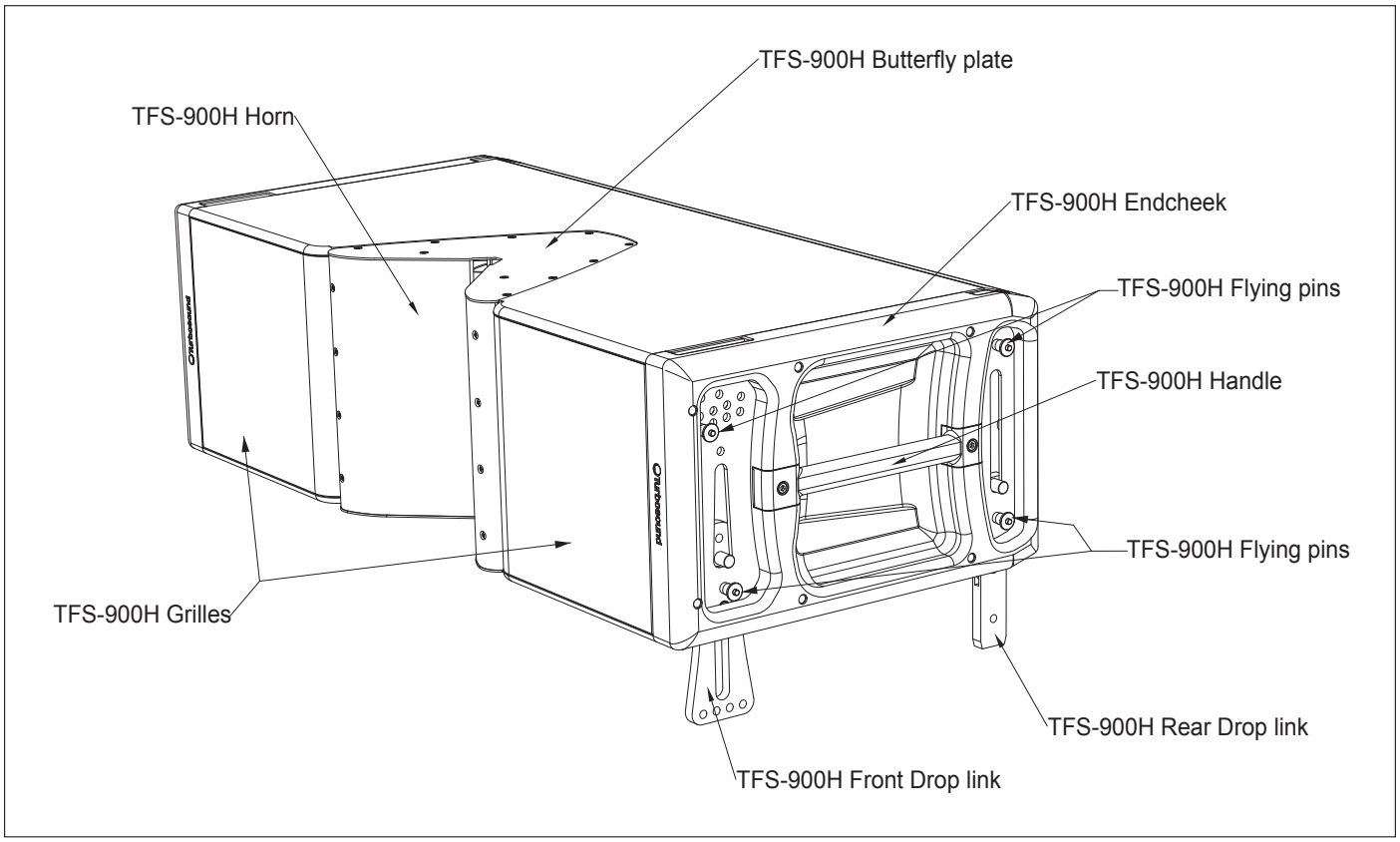

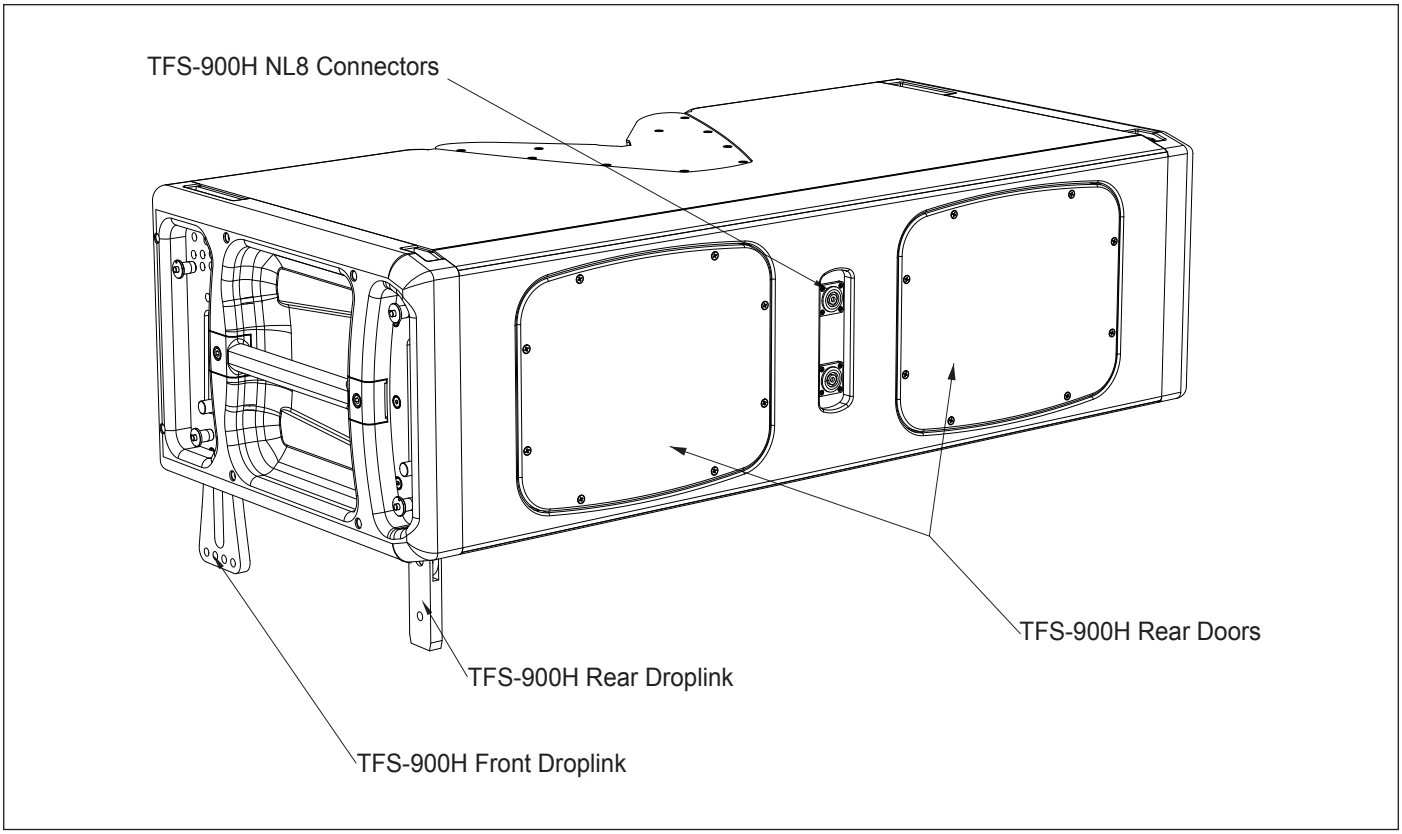

3.2 TFS-900B Subwoofer and TFS-900L Subwoofer

The TFS-900B is a dual 18” subwoofer employing hybrid loading techniques using the advantages of both bass reflex loading and horn loading to develop extremely high levels of bass and sub-bass energy.

The TFS-900B is designed for ground stacking in support of TFS-900H cabinets and includes stacking feet and matching cabinet recesses to ensure stability. Heavy duty wheels are fitted for transportation.

The TFS-900L includes rigging hardware to allow it be flown in standard and cardioid configuration and it is equipped with heavy duty wheels for transportation.

The TFS-900B and TFS-900L are both fitted with a pair of NL4 connectors. The drivers are wired independently in order to benefit from the maximum power transfer from the 20000DP amplifiers. Both cabinets are finished in black TourTough as standard.

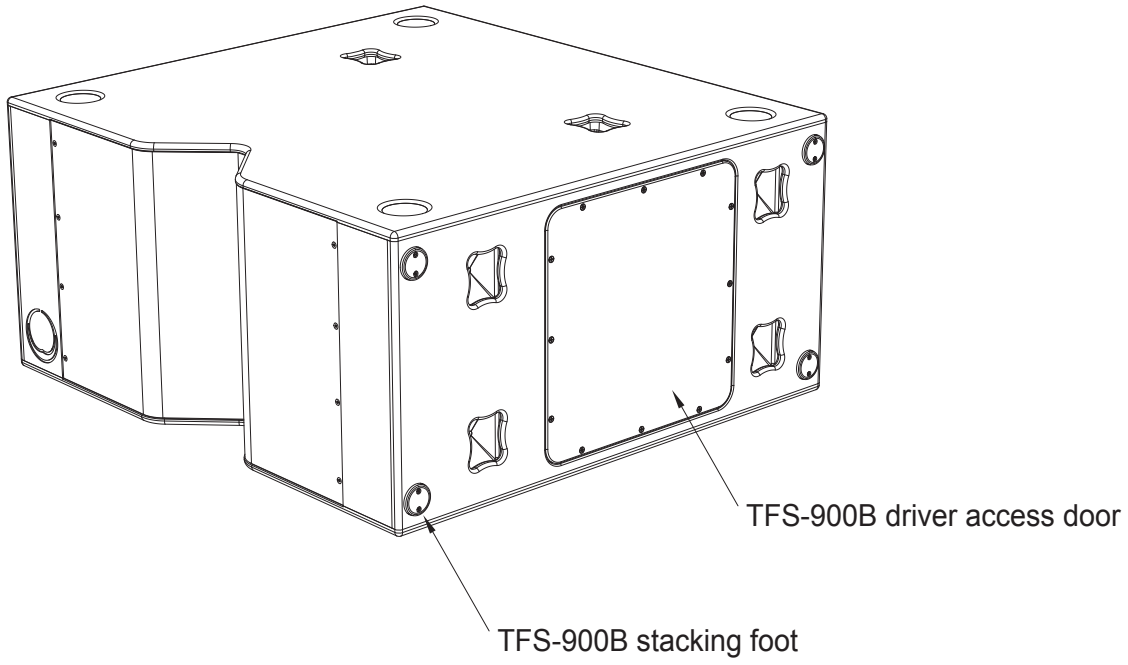
TFS-900B driver access door
TFS-900B stacking foot

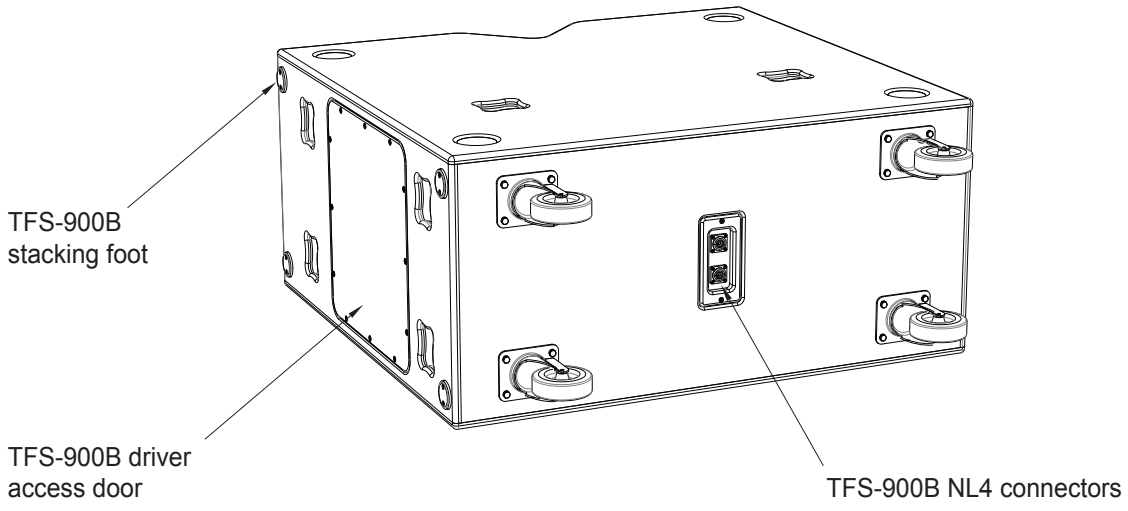
TFS-900B
stacking foot
TFS-900B driver
access door
TFS-900B NL4 connectors

3.3 TFS-DOLLY and TFS-COVER

The TFS-DOLLY allows cabinets to be transported and loaded directly from truck to stage area in a venue in blocks of four. The total weight of the stack and dolly including cover is 465.5kg.

The heavy duty TFS-COVER is designed to protect the cabinets during transit. The front and rear flaps are secured with velcro and allow the fronts of the cabinets to be accessible.

NOTE

Note that when transporting Flashline cabinets on the TFS-DOLLY that four people are required for handling the dolly in and out of trucks and stage loading area.

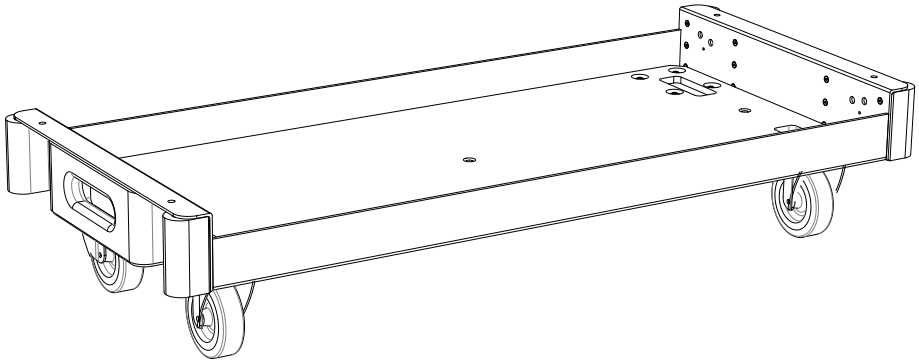

3.4 TFS-RACK

The TFS-Rack contains three 20000DP amplifiers configured to drive each of the four frequency bands in the TFS-900H from its four output channels, or to drive subwoofers.

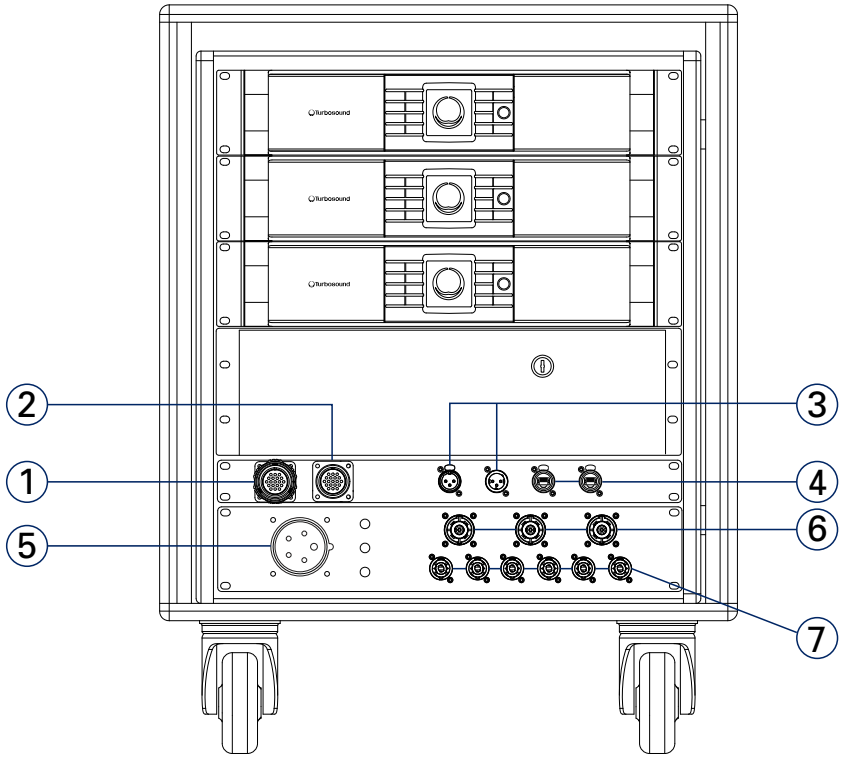

3.4.1 TFS-RACK panel connectors

1. A 19-pin female C mil connector provides multi-way signal connections to the rack. Mil C 5015 & VG 95234. The mil-spec insert Number is 22-14

2. A 19-pin male C mil connector links out to additional racks

3. AES/EBU One male and one female connector, looped through

4. Ethernet and Dante connectors, looped through

5. Mains power to the rack is provided by a 32A three phase distro on a C-Form (EMEA) or Twist-Lock (USA) connector.

6. Speaker outputs for the TFS-900H high packs are on three NL8 connectors, one per amplifier

7. Subwoofer outputs are on six NL4 connectors, two per amplifier.

3.4.2 Cable pin-outs

The NL8 connectors are wired as follows:

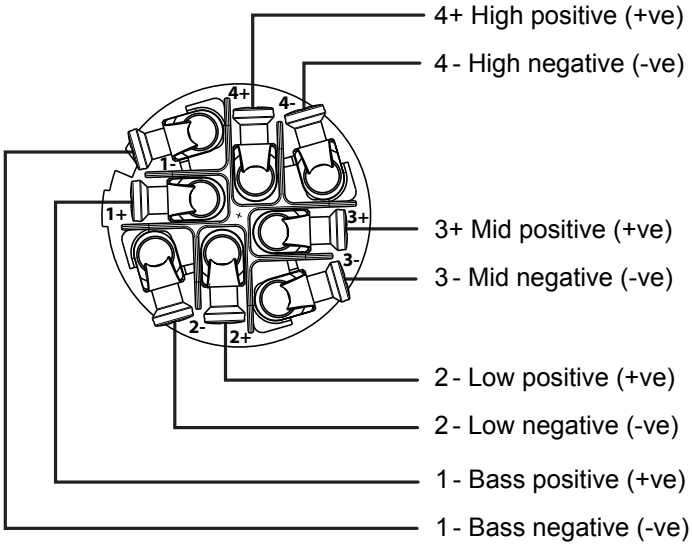

The NL4 connectors are wired as follows:

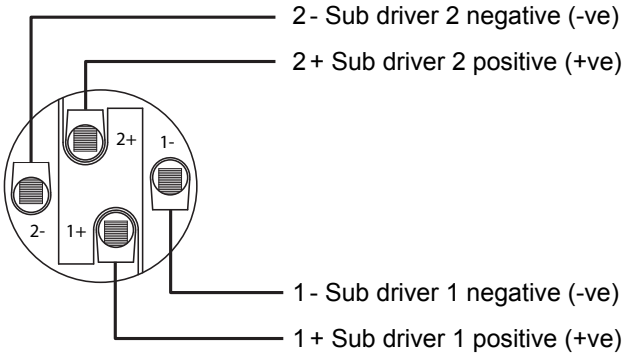

4. Connecting the Loudspeakers

4.1 Wiring convention

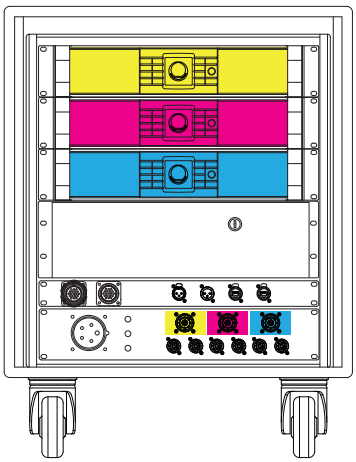

CONFIGURED FOR TFS-900H

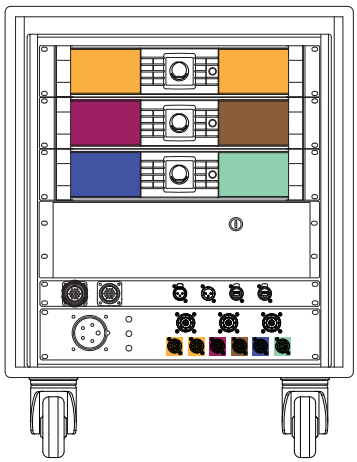

CONFIGURED FOR TFS-900B/L

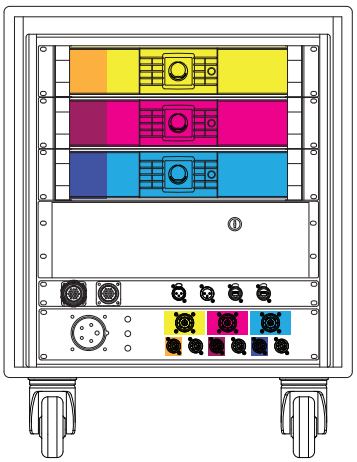

CONFIGURED FOR 4-WAY

4.2 Damping Factor in cable

Turbosound recommends that for large scale PA use the total system damping factor should be 15 or greater. Longer cables will reduce the overall damping factor of the system. In order to keep the damping factor over 15 it will be necessary to increase the impedance of the load to keep the damping factor. Therefore for long runs Turbosound recommends no more than two enclosures per amplifier. Turbosound recommends using 4mm² cable as standard.

Cable size	Length for 1 x TFS-900H (8 ohms)		Length for 2 x TFS-900H (4 ohms)		Length for 3 x TFS-900H (2.6 ohms)	
mm²	m	ft	m	ft	m	ft
2.5	38	125	18	59	12	39
4	60	197	30	98	20	66
6	90	295	45	148	30	98

4.3 Power Output Performance

Symmetrical Power

The 20000DP can deliver power as shown in the table below when all channels are driven equally.

Load Impedance (ohms)	2.0	2.7	4	8	16
20000DP Max power output (watts)	4800	5000	4440	2300	1150

Asymmetrical Power

Load Impedance (ohms)	2.0	2.7	4	8	16
20000DP Max power output (watts)	5000	5000	4500	2300	1150

5. System Configurations

5.1 Suggested amplifier loading for the TFS-900H

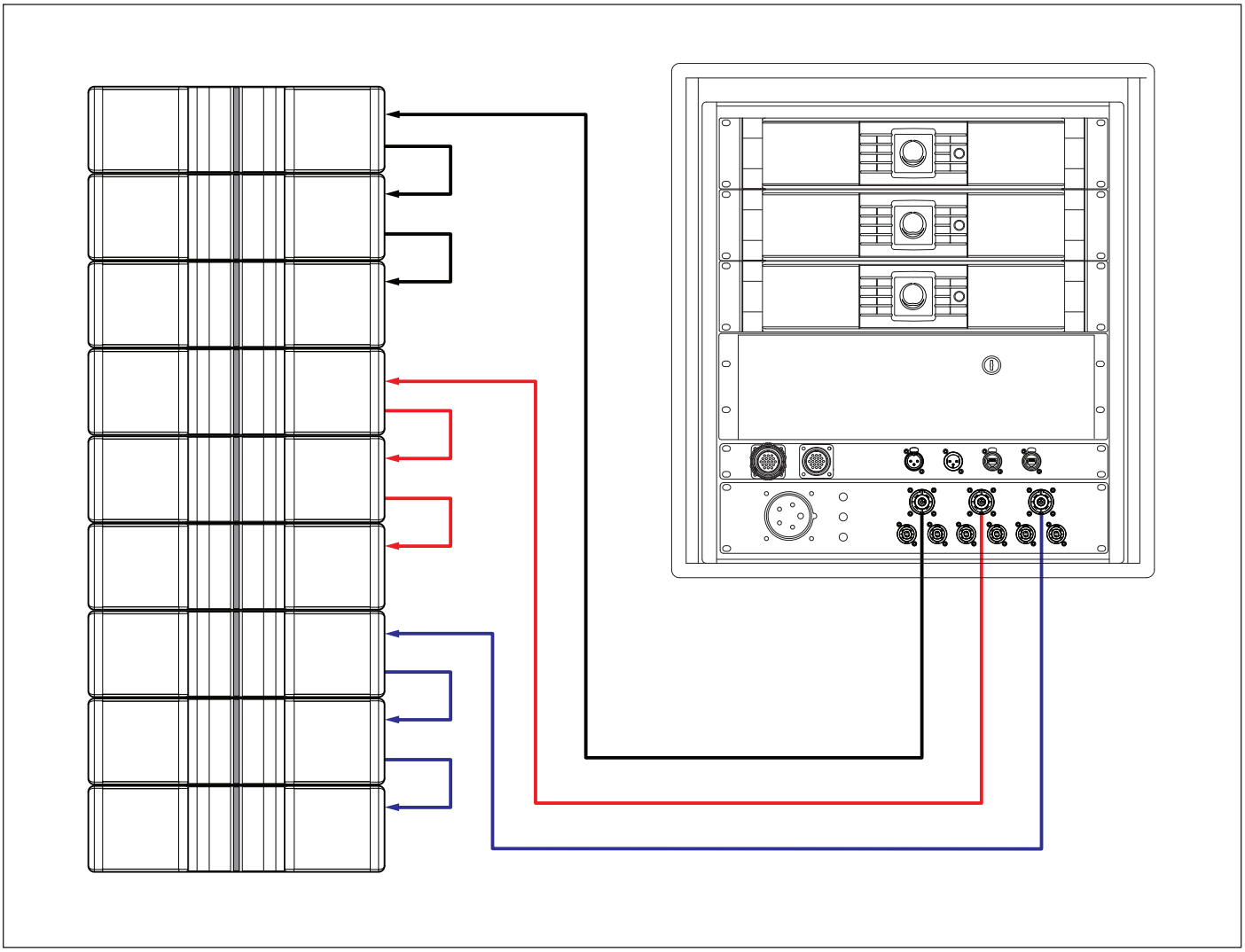

Each amplifier powers three enclosures. Whilst in theory the amplifier can power four enclosures this presents the bass and low-mid with a 2 ohm load, which does not offer optimum performance.

BASS loading 2.6 ohms
LOW loading 2.6 ohms
MID loading 4 ohms
HIGH loading 6 ohms

NOTE

Each amplifier is connected to one of the three phases on the power supply. For optimum loading on large systems it is good practice to load all phases equally.

5.2 Suggested amplifier loading for subwoofers

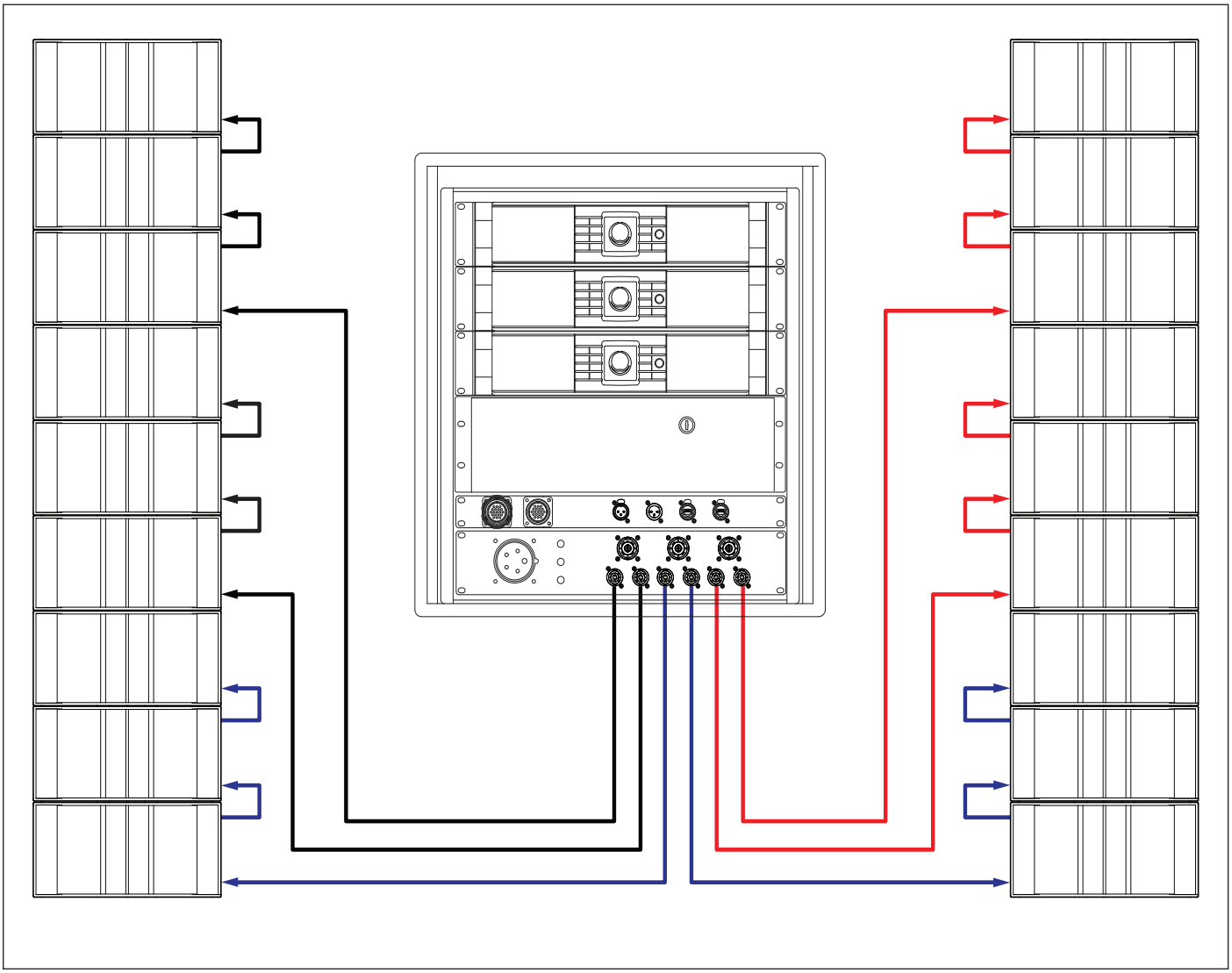

Each amplifier powers up to six TFS-900B or TFS-900L enclosures. Each NL4 connector can power three subwoofers. Each subwoofer has a drive unit wired to each pair of pins on the NL4 connectors.

NOTE

Do not use the NL4 and NL8 connections simultaneously on one amplifier.

In this configuration speaker cable lengths should not be greater than 20m due to damping factor considerations.

NOTE

Each amplifier is connected to one of the three phases on the power supply. For optimum loading on large systems it is good practice to load all phases equally.

5.3 Suggested amplifier loading for subwoofers in cardioid mode

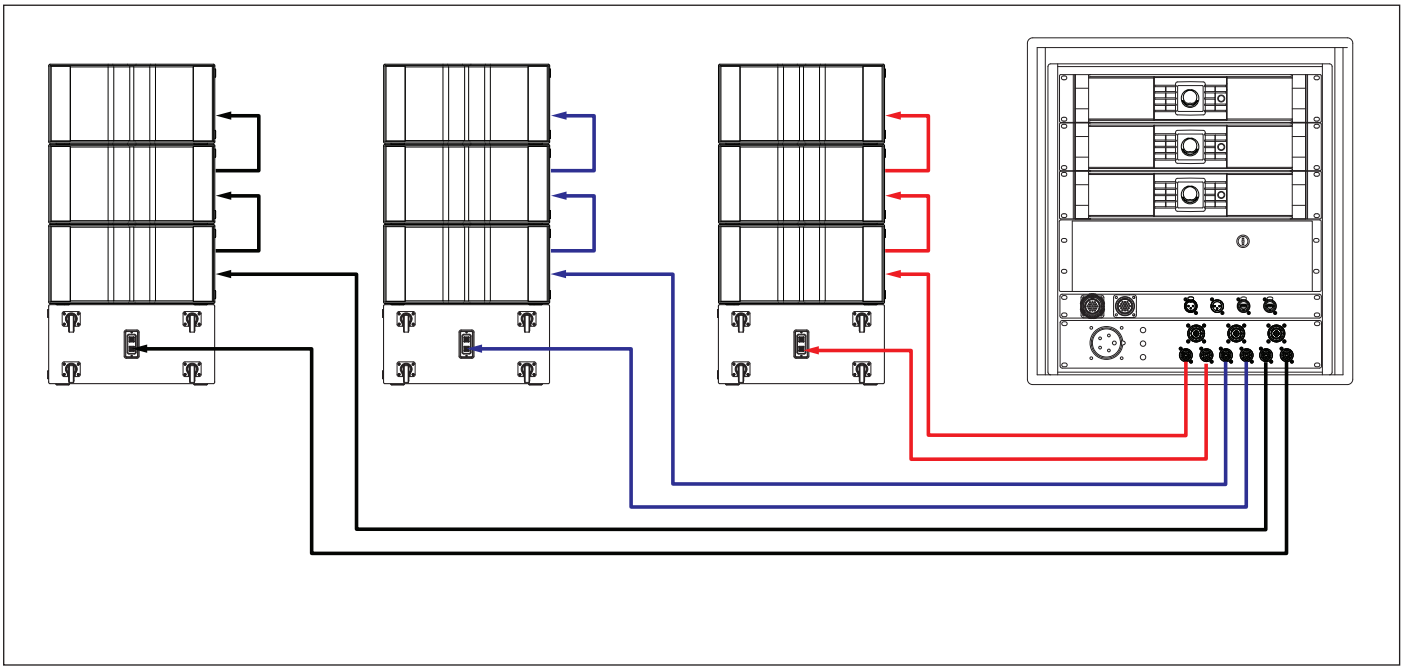

Each amplifier powers four TFS-900L or TFS-900B enclosures. The first NL4 on each amplifier powers the rear facing cardioid unit, while the second NL4 powers the three forward facing units.

NOTE

Do not use the NL4 and NL8 connections simultaneously on one amplifier.

In this configuration speaker cable lengths should not be greater than 20m due to damping factor considerations.

NOTE

Do not use the NL4 and NL8 connections simultaneously on one amplifier.

5.4 Suggested amplifier loading for a 4-way Flex Array system

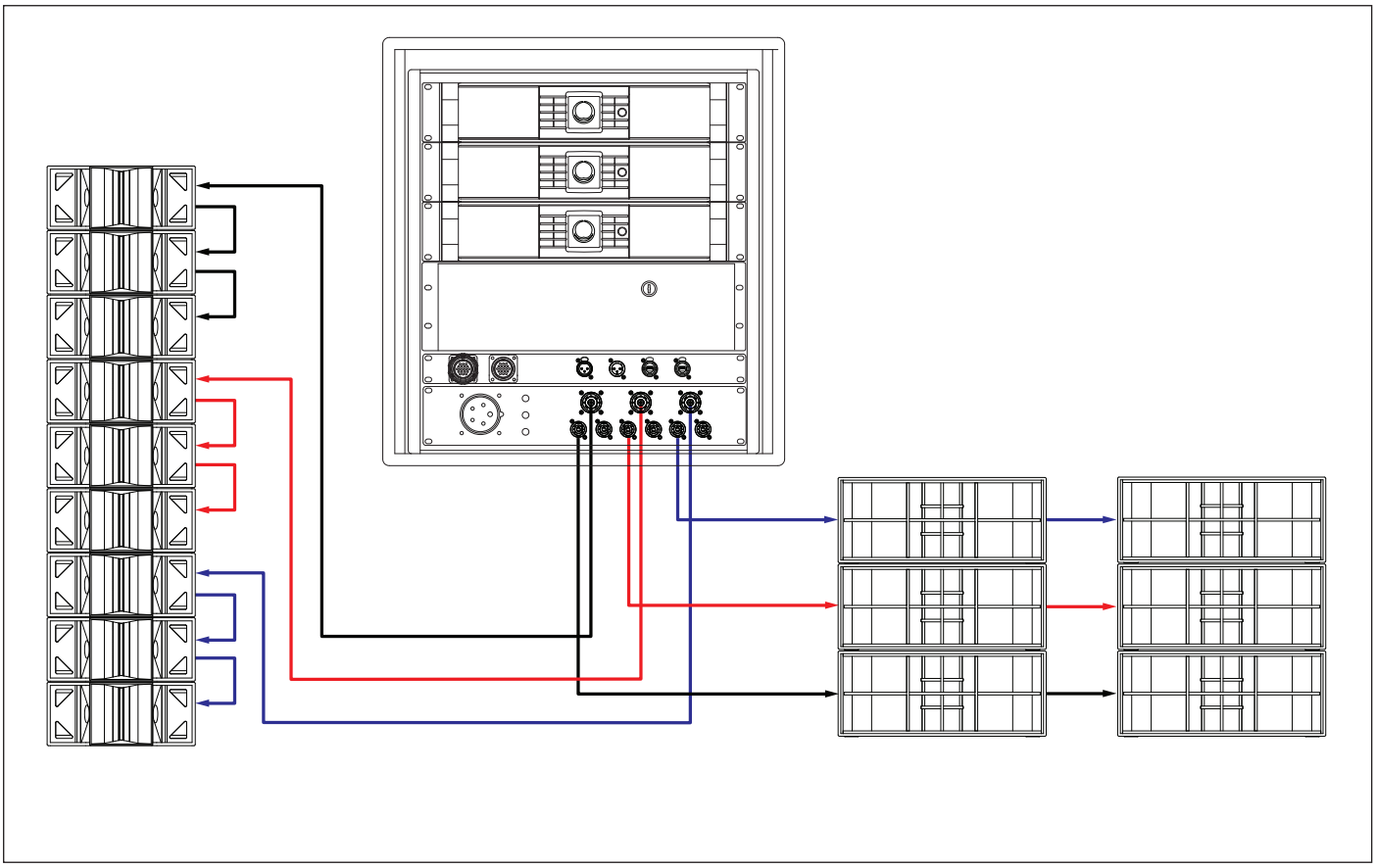

Each amplifier powers three Flex Array TFA-600H cabinets and two TSW-218 subwoofers. In this instance the NL4 and NL8 connections can be used simultaneously since the amplifier presets configure the outputs correctly.

NOTE

Do not use the NL4 and NL8 connections simultaneously on one amplifier.

6. AMPLIFIER RACK ROUTING

6.1 TFS-RACK High output routing

AMP	CHANNEL	MAX NO OF ENCLOSURES	CABINET	DUTY	NL8	NL8 PIN
20000DP - 1	CH1	3	TFS-900H	12" bass	1	1+/1-
20000DP - 1	CH2		TFS-900H	6.5" low	1	2+/2-
20000DP - 1	CH3		TFS-900H	6.5" mid	1	3+/3-
20000DP - 1	CH4		TFS-900H	1" high	1	4+/4-
20000DP - 2	CH1	3	TFS-900H	12" bass	2	1+/1-
20000DP - 2	CH2		TFS-900H	6.5" low	2	2+/2-
20000DP - 2	CH3		TFS-900H	6.5" mid	2	3+/3-
20000DP - 2	CH4		TFS-900H	1" high	2	4+/4-
20000DP - 3	CH1	3	TFS-900H	12" bass	3	1+/1-
20000DP - 3	CH2		TFS-900H	6.5" low	3	2+/2-
20000DP - 3	CH3		TFS-900H	6.5" mid	3	3+/3-
20000DP - 3	CH4		TFS-900H	1" high	3	4+/4-

6.2 TFS-RACK Low output routing

AMP	CHANNEL	MAX NO OF ENCLOSURES	CABINET	DUTY	NL8	NL8 PIN
20000DP - 1	CH1	3	TFS-900L/B	18" driver 1	1	1+/1-
20000DP - 1	CH2		TFS-900L/B	18" driver 2	1	2+/2-
20000DP - 1	CH3		TFS-900L/B	18" driver 1	2	1+/1-
20000DP - 1	CH4		TFS-900L/B	18" driver 2	2	2+/2-
20000DP - 2	CH1	3	TFS-900L/B	18" driver 1	3	1+/1-
20000DP - 2	CH2		TFS-900L/B	18" driver 2	3	2+/2-
20000DP - 2	CH3		TFS-900L/B	18" driver 1	4	1+/1-
20000DP - 2	CH4		TFS-900L/B	18" driver 2	4	2+/2-
20000DP - 3	CH1	3	TFS-900L/B	18" driver 1	5	1+/1-
20000DP - 3	CH2		TFS-900L/B	18" driver 2	5	2+/2-
20000DP - 3	CH3		TFS-900L/B	18" driver 1	6	1+/1-
20000DP - 3	CH4		TFS-900L/B	18" driver 2	6	2+/2-

6.3 TFS-RACK Flex Array routing, TFA-600L/B

AMP	CHANNEL	MAX NO OF ENCLOSURES	CABINET	DUTY	NL8	NL8	NL4	NL4
20000DP - 1	CH1	3	TFA-600L/B	18" Sub			1	1+/1-
20000DP - 1	CH2	3	TFA-600H/HW	10" Lomid	1	2+/2-		
20000DP - 1	CH3		TFA-600H/HW	6.5" Himid	1	3+/3-		
20000DP - 1	CH4		TFA-600H/HW	1" High	1	4+/4-		
20000DP - 2	CH1	3	TFA-600L/B	18" Sub			3	1+/1-
20000DP - 2	CH2	3	TFA-600H/HW	10" Lomid	2	2+/2-		
20000DP - 2	CH3		TFA-600H/HW	6.5" Himid	2	3+/3-		
20000DP - 2	CH4		TFA-600H/HW	1" High	2	4+/4-		
20000DP - 3	CH1	3	TFA-600L/B	18" Sub			5	1+/1-
20000DP - 3	CH2	3	TFA-600H/HW	10" Lomid	3	2+/2-		
20000DP - 3	CH3		TFA-600H/HW	6.5" Himid	3	3+/3-		
20000DP - 3	CH4		TFA-600H/HW	1" High	3	4+/4-		

6.4 TFS-RACK Flex Array routing TSW-218

AMP	CHANNEL	MAX NO OF ENCLOSURES	CABINET	DUTY	NL8	NL8	NL4	NL4
20000DP - 1	CH1	1	TSW-218	18" Sub			1	1+/1-
20000DP - 1	CH2	3	TFA-600H/HW	10" Lomid	1	2+/2-		
20000DP - 1	CH3		TFA-600H/HW	6.5" Himid	1	3+/3-		
20000DP - 1	CH4		TFA-600H/HW	1" High	1	4+/4-		
20000DP - 2	CH1	1	TSW-218	18" Sub			3	1+/1-
20000DP - 2	CH2	3	TFA-600H/HW	10" Lomid	2	2+/2-		
20000DP - 2	CH3		TFA-600H/HW	6.5" Himid	2	3+/3-		
20000DP - 2	CH4		TFA-600H/HW	1" High	2	4+/4-		
20000DP - 3	CH1	1	TSW-218	18" Sub			5	1+/1-
20000DP - 3	CH2	3	TFA-600H/HW	10" Lomid	3	2+/2-		
20000DP - 3	CH3		TFA-600H/HW	6.5" Himid	3	3+/3-		
20000DP - 3	CH4		TFA-600H/HW	1" High	3	4+/4-		

7. Rigging the Flashline system

7.1 Overview

The rigging system consists of the following main components:

- TFS-GRID – a rectangular box section flying frame that supports a column of up to 20 cabinets
- TFS-TIP – a central bar which provides front and rear pick up points
- TFS-FT900 – the fly trunk houses two TFS-GRID flybars and associated parts such as shackles and locking bolts. It is designed so as to allow the flybar to be connected and lifted out of the case with minimal manual handling
- Flex Array cabinets can be flown underneath as downfills using the CF-900 conversion frame
- RECLINE laser pointer allows remote monitoring of the vertical inclination of the array

7.2 TFS-FT900 Fly Trunk

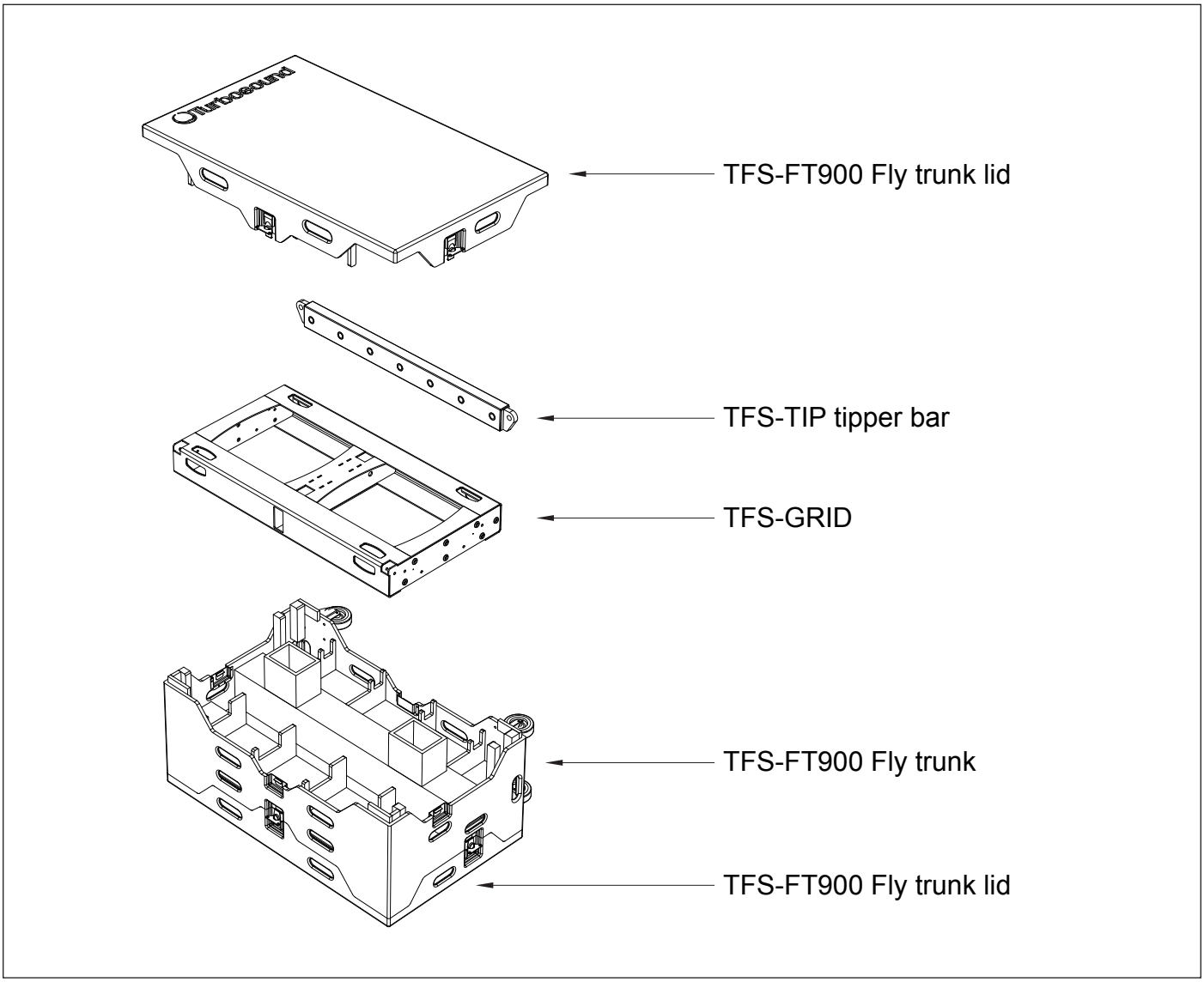

7.3 Flying an Array

- A single TFS-FT900 fly trunk contains two complete flybar assemblies and associated parts. Position the TFS-FT900 fly trunk directly under the motors and tip it onto one side.

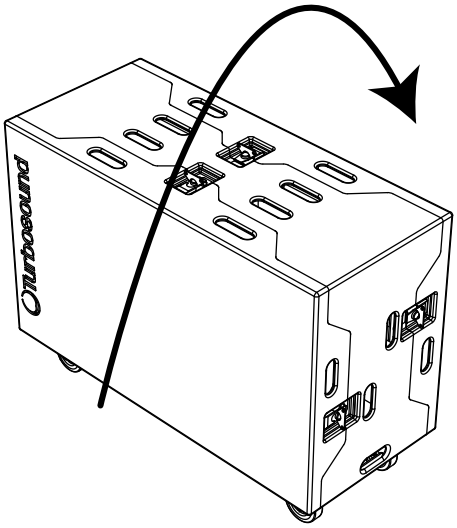

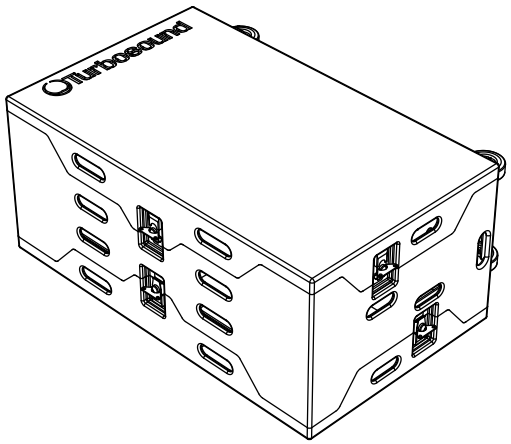

- Unlatch and remove the TFS-FT900 fly trunk lid to gain access to the TFS-GRID flybar, TFS-TIP tipper bar, and the shackles and tipper bar retaining bolts stowed inside.

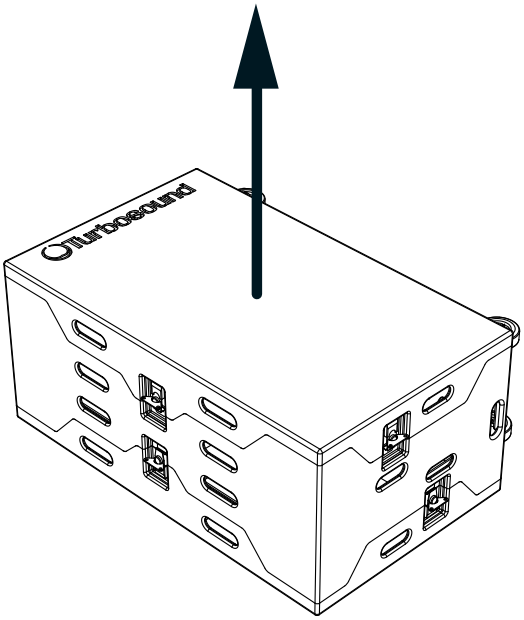

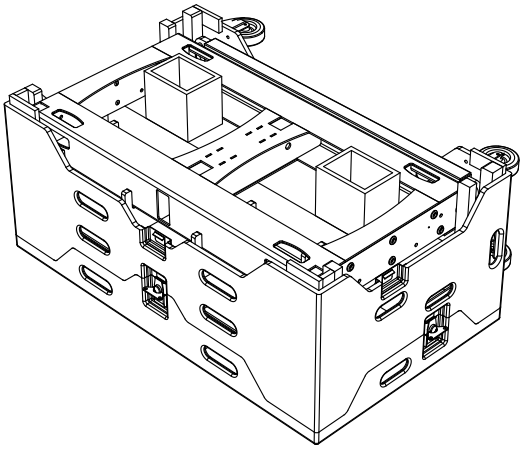

- Lift the TFS-TIP tipper bar out from its stowed location in the fly trunk and slide it into position through the central section of the TFS-GRID with the lifting eyes uppermost. The front of the TFS-GRID flybar is indicated by the small cut-outs in the corners.

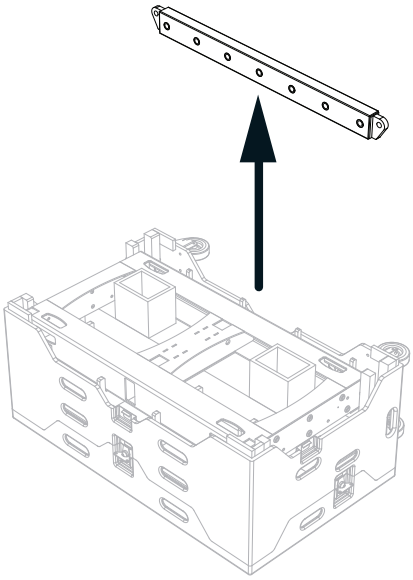

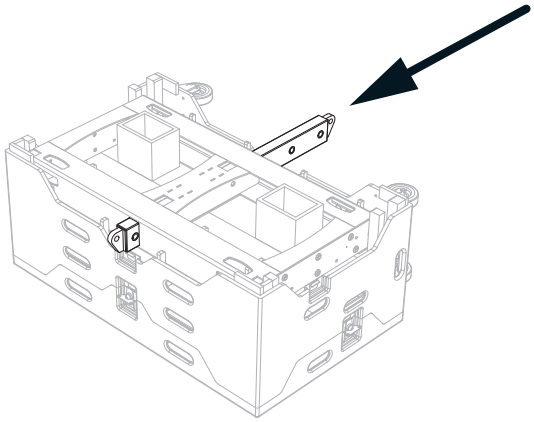

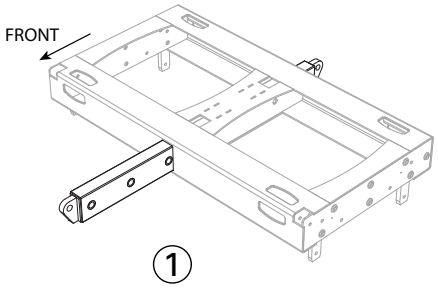

CLUSTER POINTS UP

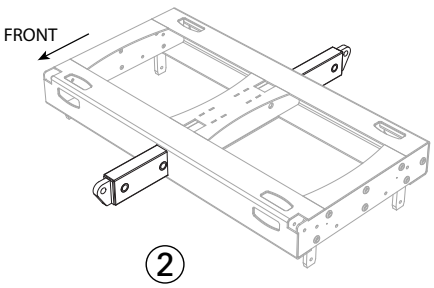

CLUSTER LEVEL

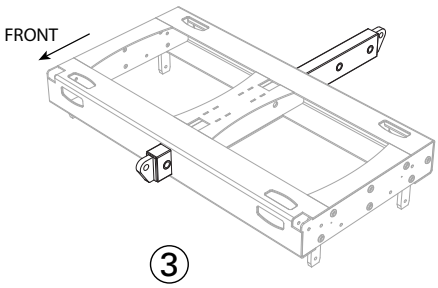

CLUSTER POINTS DOWN

- Attach 3.75 tonne shackles to each end of the TFS-TIP tipper bar at the lifting points.
- Use a 1 metre steel lifting rope between the motor and the front pickup point to raise the front motor bag so that it does not hang in front of the top cabinet.
- If using the RECLINE remote laser inclinometer system attach the sensor unit now to the front of the TFS-GRID.
- Lift the TFS-GRID flybar to above head height.

- Release the TFS-GRID flybar drop links from the lock positions by removing the pins and allowing the drop links to rotate down to their extended position. Stow the pins in the lock position.

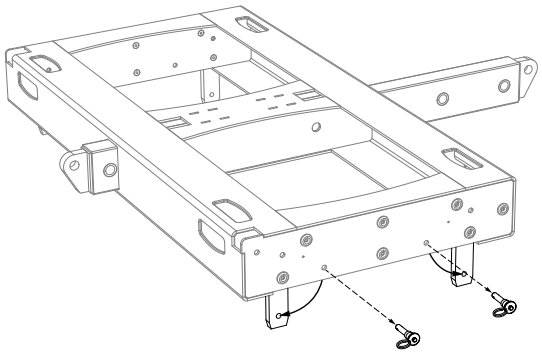

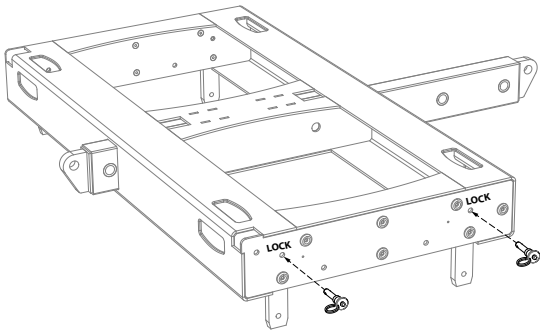

- Wheel the first four TFS-900H boxes in on a TFS-DOLLY and position them under the flybar.
- Lower the TFS-GRID flybar slowly into position above the loudspeaker stack and guide the drop links into the rigging hardware slots in the top of cabinet #1.
- Fit the top front pins on both sides of the cabinet into the holes marked **GRID**.

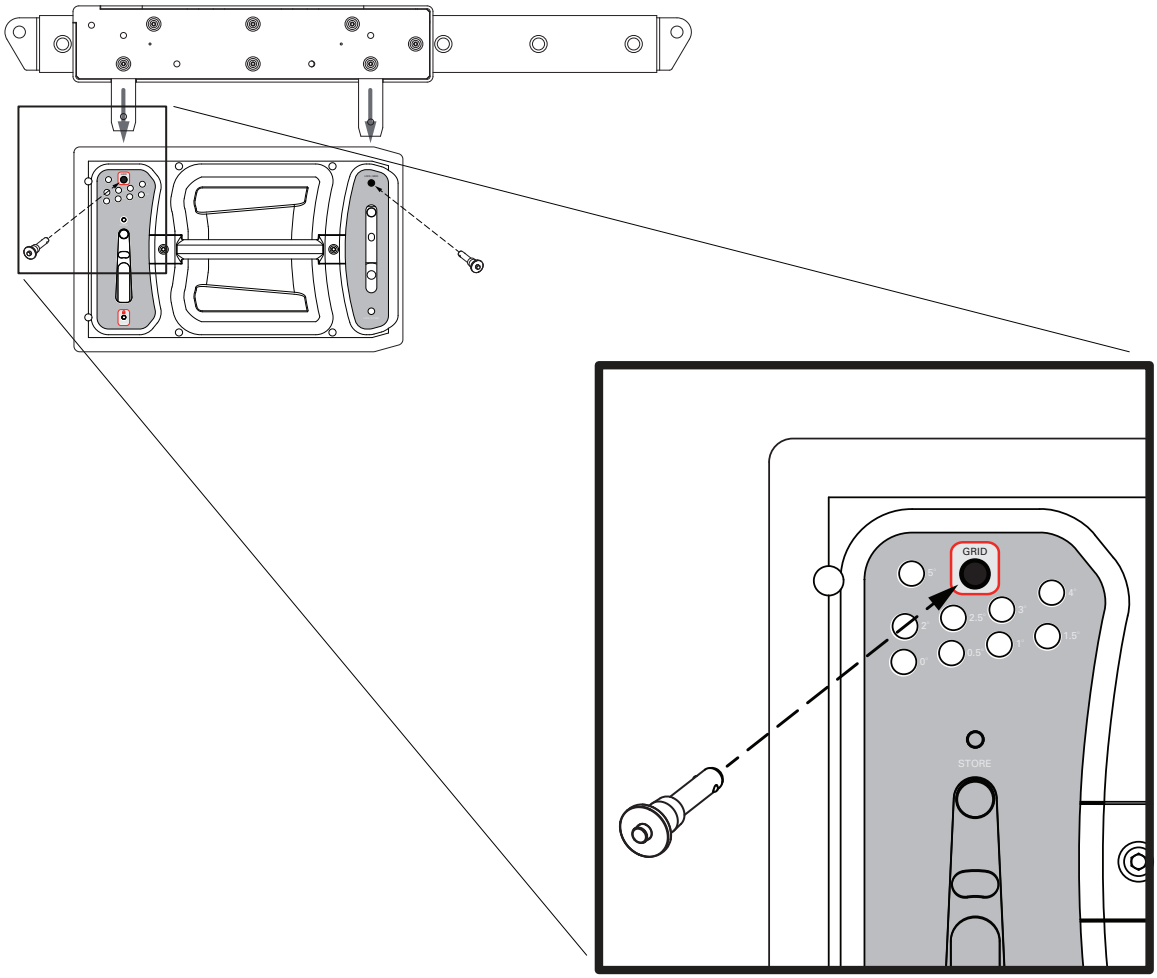

- Fit the top rear pins on both sides of the cabinet into the hole marked **LOCK/GRID.**

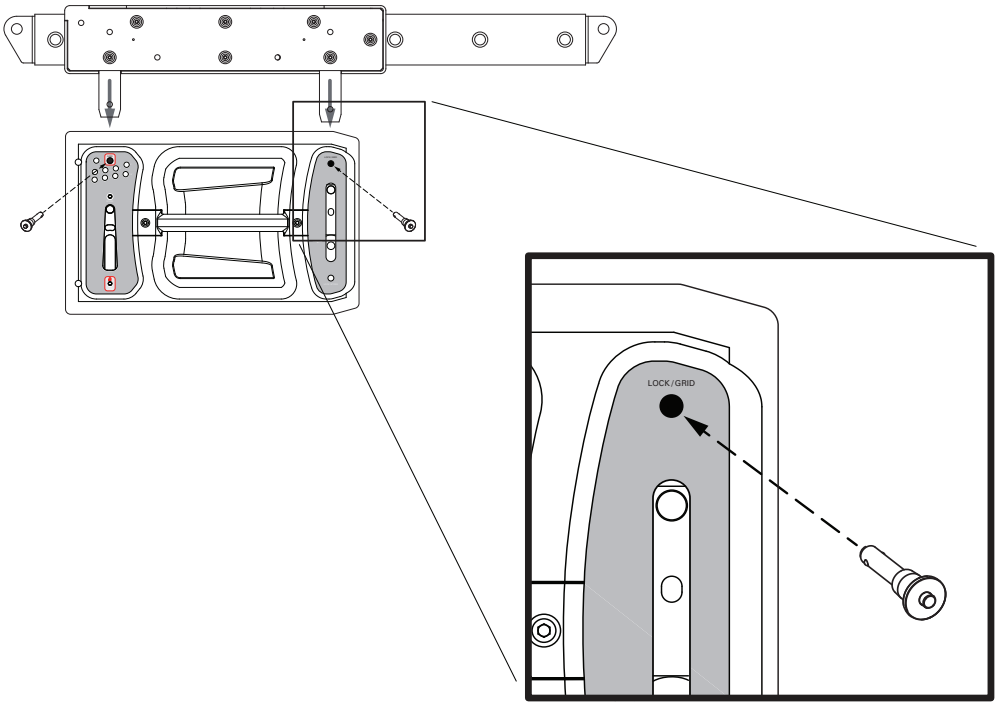

- If the inter-cabinet angles have not already been set during warehouse preparation do this now. Set the angles between cabinets with the front top pin on each cabinet by lifting the drop link of the cabinet above and inserting the pin into one of the marked holes, reading the required angle settings from your EASE Focus2 prediction. Ensure the pin is engaged in one of the four drop link holes and not in the central slot.

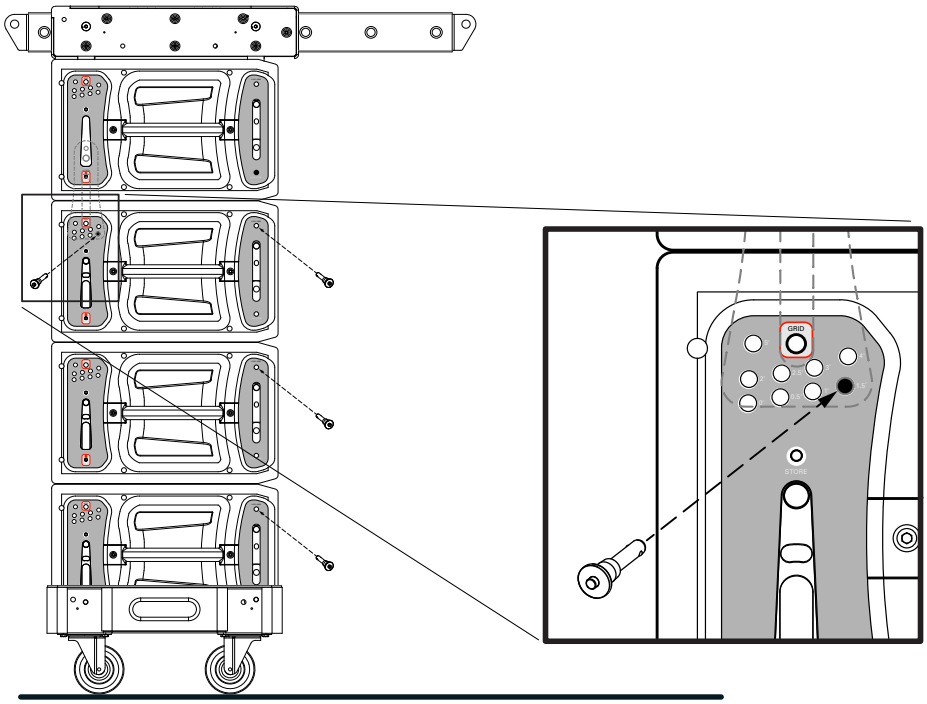

- Check that the rear pins are engaged on both sides of the cabinet. Note: never lift the array without the rear pins engaged. Regardless of how many people are rigging the array, it is one person's job to always check that the angles are set identically and correctly and that pins are fully engaged on both sides of each cabinet.
- The first block of four cabinets is now ready to lift. Check that all links are correctly fitted and secure. Take both motors up together and lift the cluster clear of the TFS-DOLLY. The fronts of the cabinets will now open up as the cluster lifts clear of the TFS-DOLLY depending on the angles set between them, creating a gradual smooth curve to the front of the array.

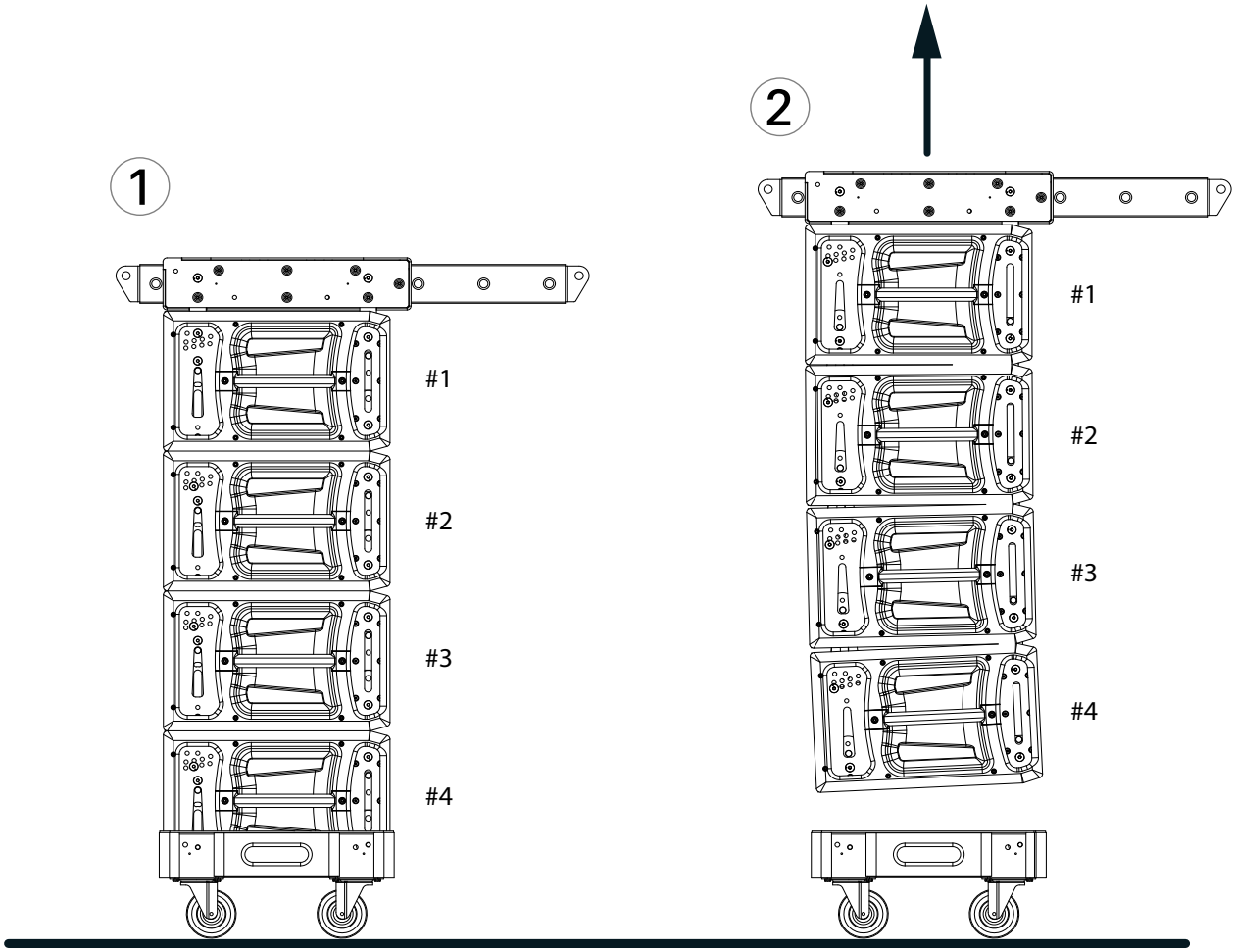

- Fit the lower front pins on cabinets #1, #2 and #3 into the holes marked **LOCK** on both sides of the cabinets in order to lock the array into a rigid structure. Do this now because if left until later it will not be possible to reach them.
- A spanset and shackle can now be attached to the rear of the TFS-GRID flybar to feed the speaker cabling through, allowing enough length to allow the cables to reach the lowest cabinet in the final cluster.
- Connect the first NL8 cable run to cabinet #1 and link down to the next two cabinets, making a total of three cabinets on the first NL8 run. Connect the second NL8 cable run to cabinet #4.

- Raise the cluster to above head height. Lower the rear motor only in order to bring the orientation of the lowest cabinet back to almost horizontal so that the next block of cabinets will locate more easily.
- Wheel the next block of cabinets in underneath the cluster.

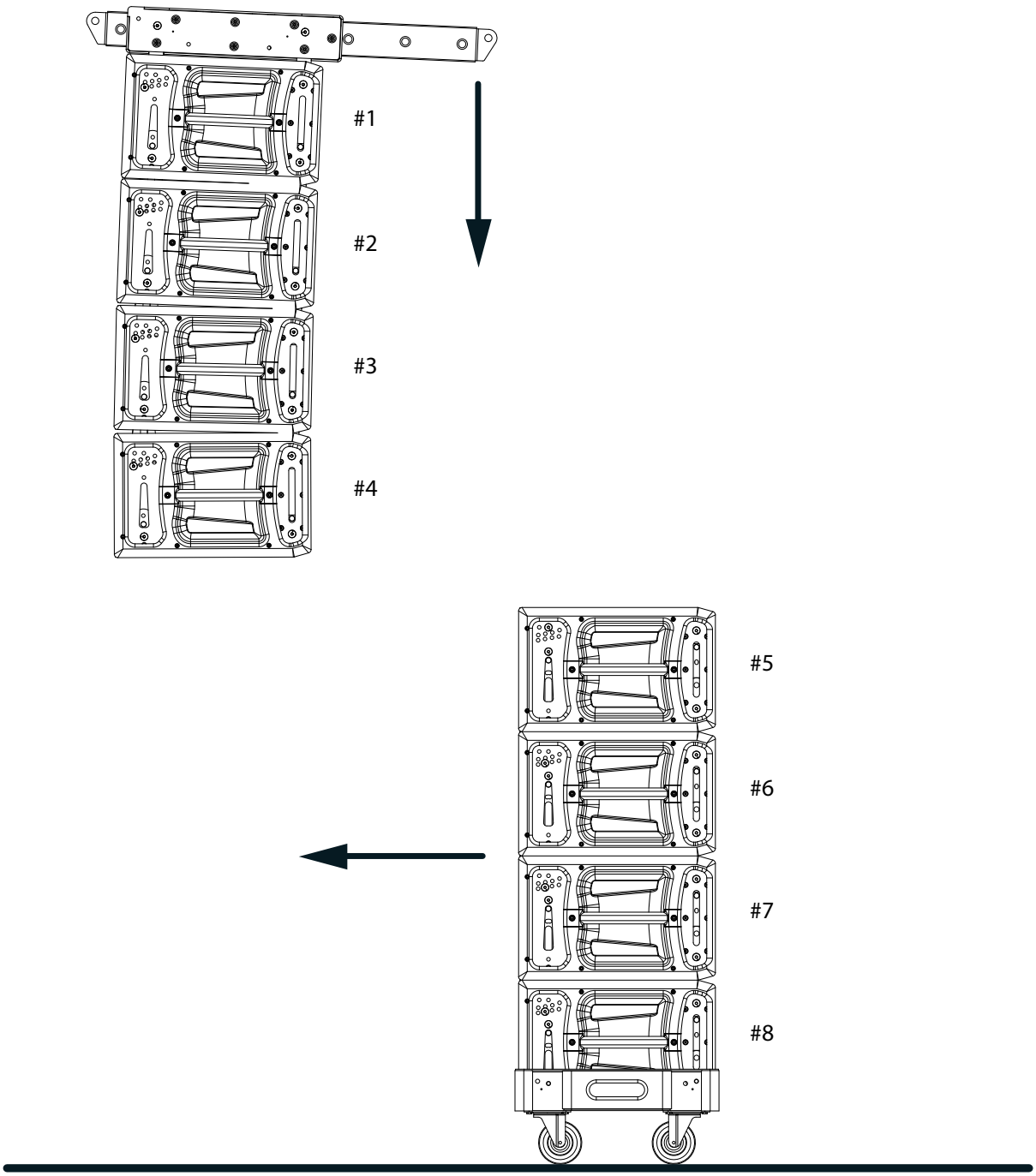

- Release the drop links on cabinet #4 from their stowed positions by removing the bottom front and rear pins and allowing the drop links to drop down to their extended position. Replace the pins in the front andf rear positions.
- Lower the cluster very slowly, allowing the drop links on cabinet #4 to locate into the channels of the flying hardware on cabinet #5, eventually sitting flat on top of it.

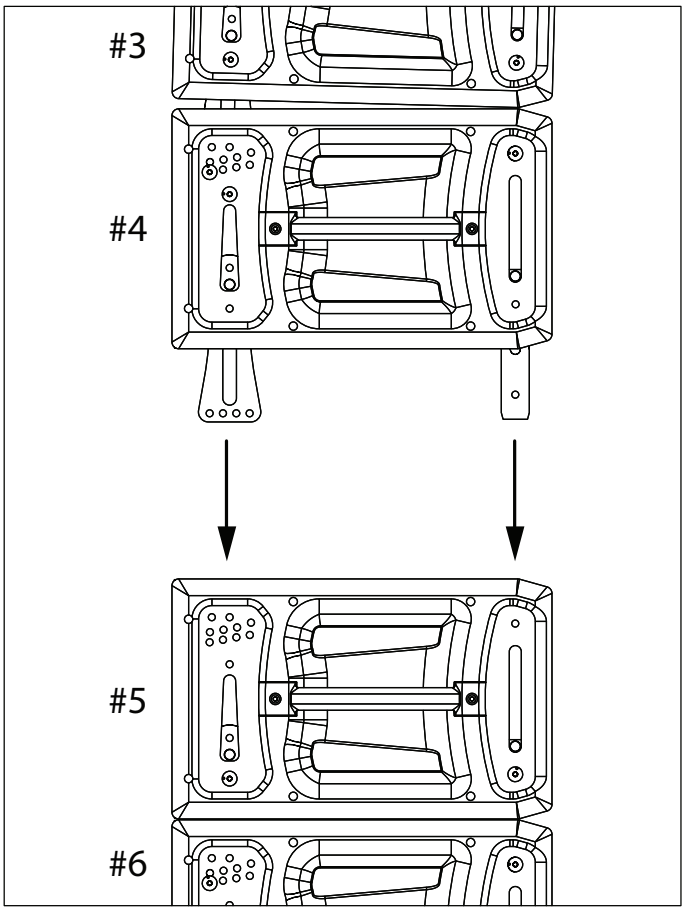

- Locate the top rear pins on cabinet #5 in the **LOCK/GRID** position. Set the angles on cabinets #5, #6, #7 and #8 using the top front pins if these have not been done already. Take both motors up together and lift the second block of cabinets off the TFS-DOLLY. As before the fronts of the cabinets will now open up depending on the angles set between them.
- Fit the remaining lock pins to stabilise the array.
- Continue this procedure until the required number of cabinets are flown.
- Raise the array to the height specified by your EASE Focus2 prediction using a tape measure or laser system to check the height of the array

- The TFS-DOLLY wheelboards can be stacked using the woodwork rebates provided Fold the TFS-COVERS and stack them on top of the wheelboards.

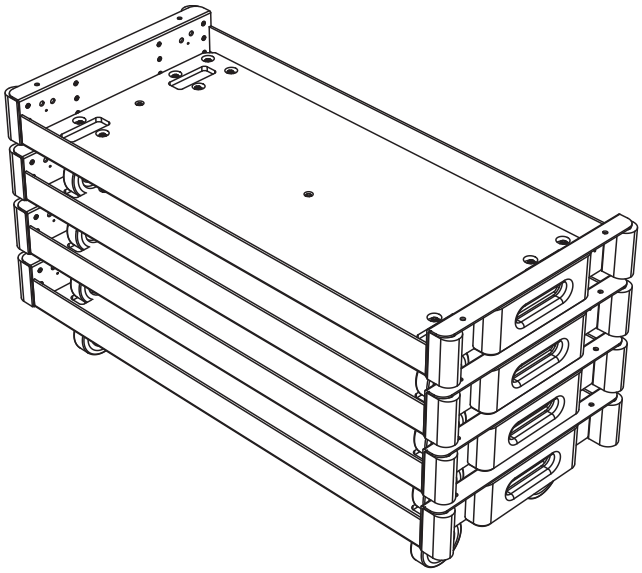

7.4 De-rigging the Array

- Taking the cluster down is a simple reversal of the rigging procedure. Bring the cluster down until the bottom box is approximately a foot off the ground, and take the lock pins out at the front of the lowest four or more boxes (depending on the curvature of the array) to allow the cabinets to close up, and place them in the stow position. Lower the back motor gently to get the bottom box reasonably horizontal.

NOTE

Make sure you always know the total weight of the cluster. Never put more weight on a rigging point than it is rated for, and always calculate how much weight is on each rigging point.

- Carefully lower the cluster down onto a TFS-DOLLY. Disconnect the top pins from the fourth box.
- Carefully raise the array to free the lower four boxes.
- Ensure the drop link of the bottom box is up and into its locked position. Do not land the cluster on the drop link or you will bend the rear hinge. Do not leave the front lock pins in for trucking, always put them in the store position.
- Leave both pins in on the rear assembly because it is designed to allow the cabinets to touch each other in a truck rather than the rigging hardware.
- Having de-rigged each block of cabinets onto a TFS-DOLLY one by one, put the covers on and stow the NL8 links in the cover.
- Finally lower the TFS-GRID flybar into the TFS-FT900 flytrunk in, disconnect the motors and lift the motors to a safe position above head height.
- Stow the shackles in the trunk, slide the TFS-TIP tipper bar out, put the bolts back in the trunk and replace the tipper bar in its stowed location.

7.5 Flex Array as Downfills

Fles Array cabinets can be deployed at the bottom of a Flashline array as downfills using the CF-900 conversion frame.

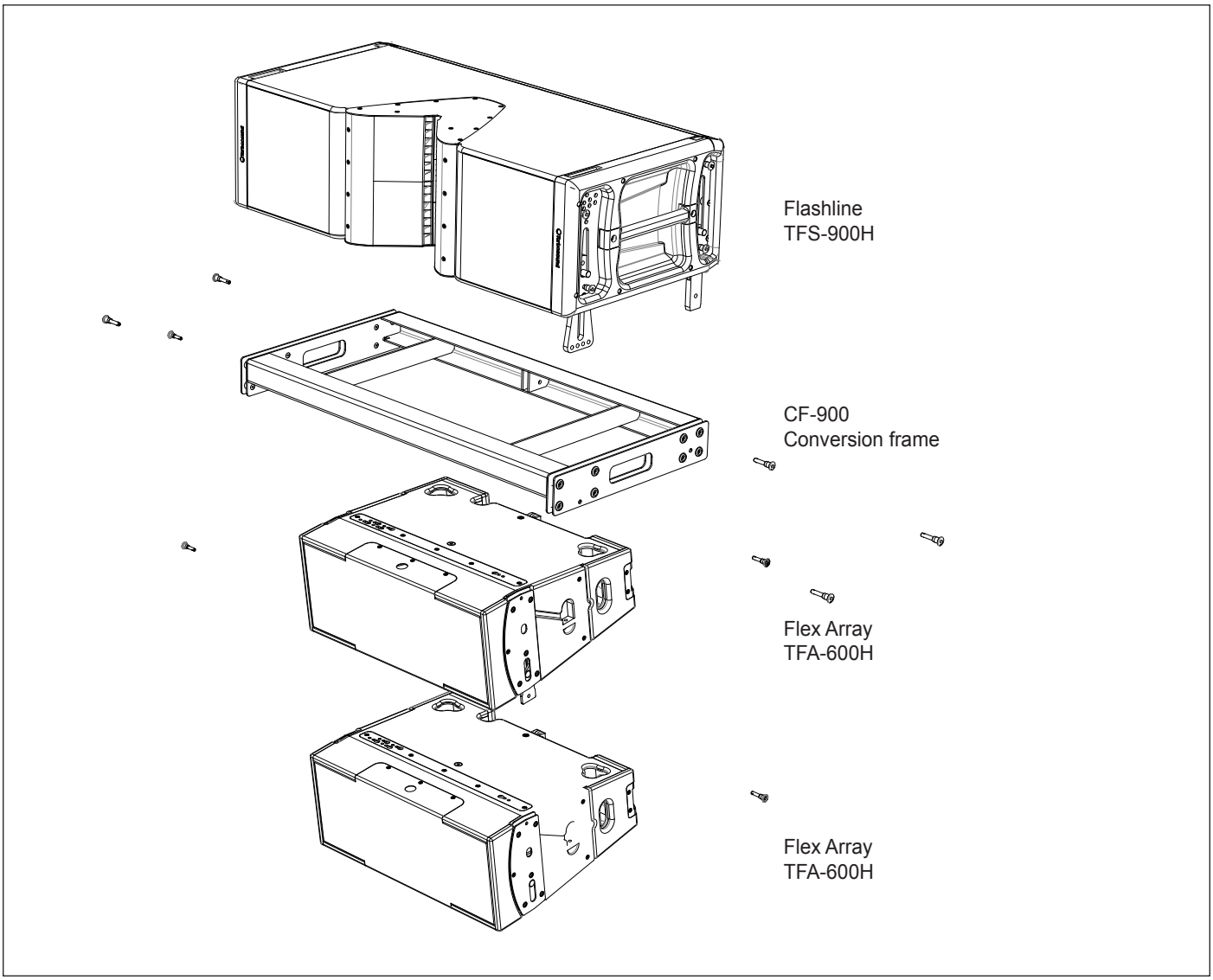

8. The 20000DP AMPLIFIER

8.1 Main features

The 20000DP incorporates a number of sophisticated technologies to ensure the best possible performance and many years of reliable operation. The following section summarizes the benefits of each feature; additional information is available in the reference manuals.

8.1.1 Amplifier Platform

The 20000DP features extraordinary power density, patented Class TD® output stages, Regulated Switch Mode Power Supply (R.SMPS™), the high-efficiency Intercooler® copper-finned cooling system, and a full suite of protection features. Signal inputs are analog, AES digital, and Dante digital audio network; loop-through outputs or redundant pairs are provided for each input type.

Please refer to the 20000DP Operation Manual for further information.

8.1.2 Amplifier DSP (Digital Signal Processing)

Various features are controlled by the on-board DSP, some of which are summarized in this section.

8.1.2.1 Input Gain (Sensitivity)

Input gain (sensitivity) is set in the digital domain, and may be controlled via the Lake Controller software or front-panel interface.

8.1.2.2 ISVPL™

The Inter-Sample Voltage Peak Limiter (ISVPL) tailors each power output to the characteristics of the connected load. Please refer to the 20000DP Operation Manual for further information.

8.1.2.3 Load Verification & Performance Monitoring

A comprehensive set of proprietary DSP-based tools are provided for load verification and real-time performance monitoring. These functions utilize LoadLibrary, a comprehensive database for each loudspeaker component of the connected load (usually one or more band-limited drivers in a multi-way system).

Using this data and a brief test signal, LoadSmart compares actual response to predicted response, identifying any malfunctioning components or connection errors. During the performance, SpeakerSafe™ monitors real-time load status, including temperatures of the amplifier stages as well as magnets and voice coils of connected loudspeakers. This allows operators to avoid power compression and identify potential problems.

Please refer to the Lake Controller Operation Manual for detailed information on load verification and real-time performance monitoring functionality.

8.1.3 Lake Processing and Controller

The 20000DP integrates seamlessly into the Lake Processing environment. Two processing modules offer precise settings for gain, delay, crossover settings, equalization and limiting. Lake processing features incorporated in each module include Raised Cosine Equalization™, linear phase crossovers, and LimiterMax™ loudspeaker protection. The Super Module feature allows hardware processing modules in two or more separate devices to function as a single module in the Lake Controller software. Please refer to the Lake Controller Operation Manual for further information.

8.1.4 Lake Analyzer Bridge

Lake Controller software provides integration with third-party real-time analyzers, providing simultaneous measurement display and EQ adjustment via the Lake Controller. The third-party measurement tools that can be integrated via the Analyzer Bridge include:

- Smaart Live Version 5.4
- Live-Capture Light / Live-Capture Pro

Smaart, distributed and supported by Rational Acoustics, provides real-time sound system measurement, optimization and control. Smaart combines several powerful audio frequency measurement and analysis tools.

Live-Capture, created by WaveCapture, offers easy-to-use software and measurement tools for sound engineers, installers, consultants and designers. The Lake Analyzer Bridge in conjunction with Live-Capture Light provides a completely free spectrum analyzer via your Lake Controller software interface.

8.1.5 Dante™ Audio Network

The 20000DP includes Dante digital audio networking as standard. Utilizing the latest advances in Ethernet technology, Dante offers simplified system configuration and extremely low latency while delivering very high quality uncompressed digital audio across the Lake network. The Zen™ automatic configuration feature enables plug-and-play setup without third-party DHCP or DNS servers. Dante is compatible with high-bandwidth networks, allowing large numbers of audio channels to be distributed alongside control and analyzer data.

8.2 Additional Documentation

This document, the 20000DP Quick Start & Field Reference Guide, serves as a basic introduction to the installation and operation of the 20000DP Powered Loudspeaker Management system. More detailed information is available in the comprehensive 20000DP Operation Manual, which serves as the primary reference source for detailed information on the installation and operation of the 20000DP Powered Loudspeaker Management system.

If you intend to use the device as part of a networked system, or access features via the Lake Controller, please refer to the various supporting documents which can be located via these methods:

- Start > Programs > Lake Controller > Documentation (after installing Lake Controller software)
- On the Installer CD-ROM or the downloaded software installer
- Online at: http://labgruppen.com/index.php/products/documentation/

9. Amplifier Installation

9.1 Unpacking

Carefully open the shipping carton and check for any damage to the device or the supplied accessories. Every Turbosound product is tested and inspected before leaving the factory and should arrive in perfect condition. If any damage is discovered, please notify the shipping company immediately. Only the consignee may initiate a claim with the carrier or their insurers for damage incurred during shipping. Save the carton and packing materials for the carrier's inspection.

In addition to the 20000DP amplifier, the shipping carton include the following items:

- 20000DP Quick Start & Field Reference Guide
- AC mains lead (power cable) with Neutrik® powerCON® connector
- Rear brackets for additional rack support (pair) along with associated mounting hardware
- Software Installer and Documentation CD-ROM

Please keep the original carton and associated packaging to facilitate shipping of the device should the need arise.

9.2 Mounting

Airflow for cooling the 20000DP is from front panel (intake) to rear panel (exit). Please ensure that no object, such as rack doors or lids are placed at the front or rear of the rack to ensure that airflow is maximized. This device has no top or bottom vents and therefore may be stacked directly on top of each other. Sufficient space should be available at the front of the rack to accommodate the handles, and at the rear to accommodate connectors and cables; allowance must be made for cable or loom bends within a rack.

9.3 Rear Mounting

Two rear support brackets along with associated mounting hardware are included with the 20000DP, as shown in Figure 1; it is recommended that these are used wherever possible. Fit the brackets to the vertical rails at the rear of the rack. Figure 2 and Figure 3 show the fitting options for fixed and removable installation. The support brackets are reversible and may be fitted to point either to the front or rear of the rack; the orientation used depends on the rack depth and position of the rear rack rails. Two mounting methods are possible; note that the method shown in Figure 2 additionally provides extra security against unauthorized removal. For situations where rapid removal and replacement is required, the method shown in Figure 3 should be used.

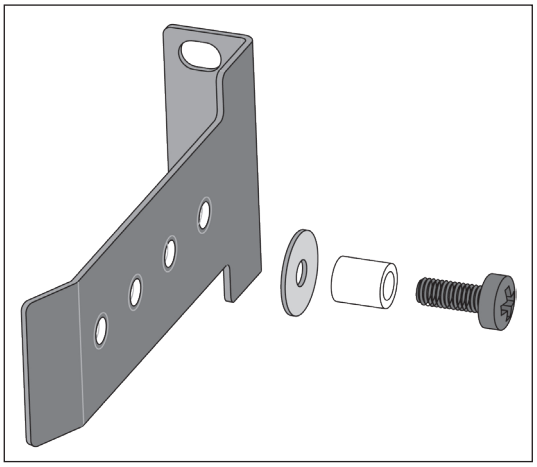

Figure 1: Rear Support Bracket and Mounting Hardware

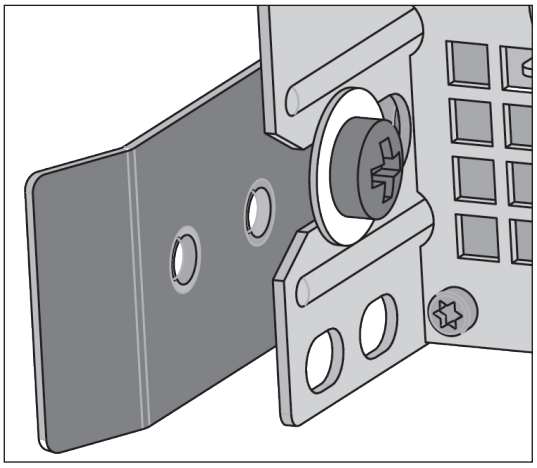

Figure 2: Use washer for permanent installation

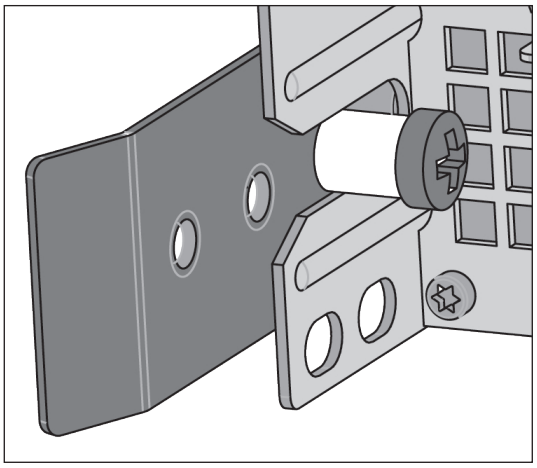

Figure 3: Use tube for slide-on installation

9.4 Cooling

9.4.1 Overview

The 20000DP uses a forced-air cooling system with airflow from front to rear, allowing high continuous power levels without thermal problems. Front-to-rear airflow is preferable as air at the front of a rack is cooler than that at the rear in nearly all situations; never attempt to reverse the airflow. The operation of the cooling system is dependent on front-to-rear airflow; it will not function effectively with external airflow in the opposite direction.

Make sure an adequate air supply is provided in front of the 20000DP, and that the rear of the amplifier has sufficient space to allow air to escape. If the amplifier is rack-mounted, never operate the unit with any front or rear rack doors or covers in position. It is recommended to keep the ambient temperature around the amplifier as cool as possible. An increased temperature can have a significant negative impact on the expected lifetime on the components inside the amplifier.

NOTE

Fit solid blanks (not ventilation blanks) to unused rack spaces to ensure effective air circulation. Leaving gaps in between items of equipment degrades the effectiveness of forced-air cooling.

If installing one or more 20000DP amplifier in a rack with other fan-cooled equipment, be sure that all the other equipment also uses front-to-rear airflow for cooling. If this precaution is not observed, there is a risk of overheating, as units with the reverse airflow will be drawing in air which has already been heated by the amplifiers.

9.4.2 Temperature Sensing and Protection

The 20000DP is equipped with a sophisticated temperature sensing system which protects it from any overheating which may occur as a result of inadequate ventilation.

9.5 Operating Voltage

The 20000DP is equipped with a universal power supply operating from 80 to 265 V. Only connect the mains cable (AC cord) to an AC source of the voltage shown on the label. The 20000DP uses primary switching, which means the mains power is rectified on the primary side of the transformer. This makes the power supply insensitive to mains frequency variation, and it will operate normally on line frequencies from 45 to 75 Hz. If the mains plug (AC plug) fitted to the mains cable (AC cord) is not appropriate for your country, it can be removed and a locally-sourced one fitted instead, observing the color coding in the table below:

PowerCON Pin	230V version	115V version
L	Brown	Black
N	Blue	White
E	Green/Yellow	Green

If you are not 100% confident of your competence to replace the mains plug (AC plug), the task should be carried out by qualified personnel.

Once a suitable AC power supply is connected, the device can be turned on using the front panel power button. When turned on, a diagnostic routine is performed and the power button LED changes from red (Standby) to green (Active).

> **NOTE**
> *In-rush current is controlled and limited during the soft-start sequence. This enables multiple amplifiers on the same AC mains circuit to be turned on simultaneously.*

9.6 Grounding

Analog inputs feature Iso-Float™ ground isolation, a technology which combines the benefits of transformer-coupled isolation with the advantages of clean, direct-coupled inputs. The audio converters are galvanically isolated, and not connected to the main ground. High-speed transformers and opto-isolators create a barrier between the device and the outside electrical environment.

> **NOTE**
> *The Iso-Float feature is activated by default, but may be disabled via the Lake Controller software, or via the front panel menu.*

Use correctly-shielded balanced audio input connections to minimise hum and interference. NEVER disconnect the earth (ground) pin on the mains cable (AC power cord).

10. Product Overview

10.1 Front Panel Overview

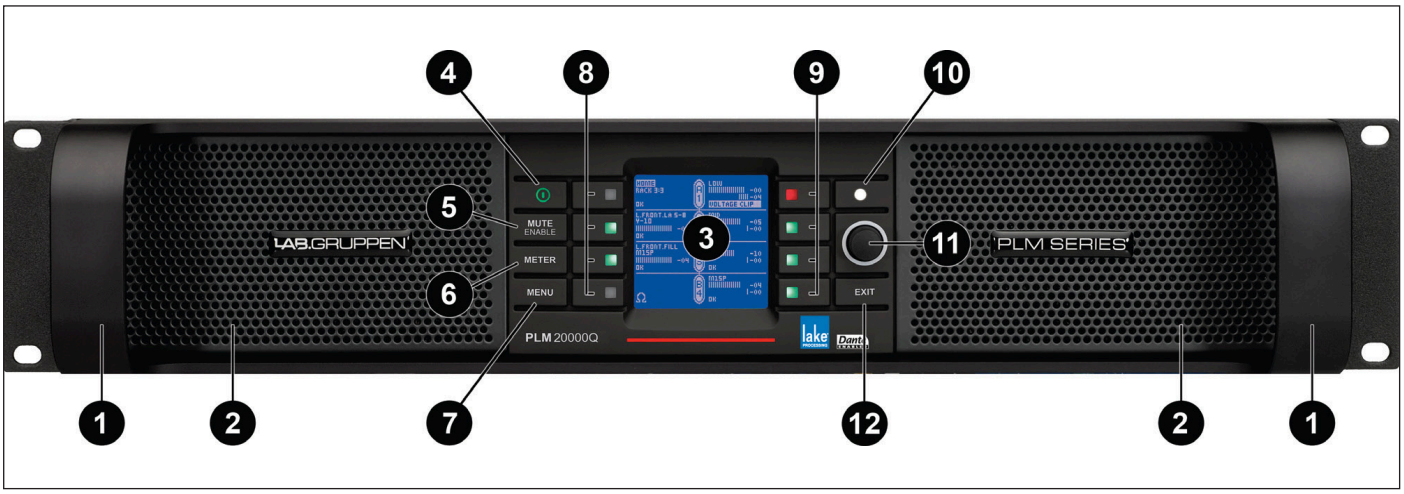

Figure 4: Front Panel Overview

The front panel controls are clustered around a daylight readable LCD, allowing adjustment and monitoring of the majority parameters and meters. The two clusters of controls on either side of the LCD include five dedicated function buttons, eight dynamic function buttons with embedded LEDs and a rotary data encoder .

10.1.1 Handles

Two sturdy metal handles are fitted to the front panel. The handles should be used when carrying the device, and when fitting it in or removing it from a rack. Ensure that any door or removable rack front cover has sufficient depth to clear the handles.

10.1.2 Dust Filters

Two dust filters are fitted behind metal covers. To remove the covers, loosen the thumbscrews located behind the handles. Once detached, the dust filter elements can be removed for cleaning.

NOTE

NEVER operate this device without the dust filters in place.

10.1.3 Display

The display illuminates when the device is on. The LCD, function buttons, and the rotary encoder provide real-time control and monitoring of most parameters. The LEDs embedded in the function buttons indicate available menu options, provide confirmation of Controller communication, and indicate various faults and warnings. The brightness and contrast of the display and front panel LEDs can be adjusted via the front panel menu.

10.1.4 Standby

The 20000DP is powered on and to standby using the top-left button, or via the Lake Controller.

10.1.5 Mute Enable

Select MUTE ENABLE to allow the dynamic function buttons to operate as mute controls for the Module inputs and power output channels. The MUTE ENABLE button flashes when the mode is selected; a subsequent press deselects this mode. If left activated, MUTE ENABLE mode will automatically disable two minutes after the last mute action.

10.1.6 Meter

The METER button scrolls through four alternative meter views: Home View, Module View, Temperature View and Input View. Pressing METER from Menu Mode returns the screen to Meter Mode with Home View displayed.

10.1.7 Menu

After pressing the MENU button, the LCD will display the top level menu. In Menu Mode the function buttons enable access to various information and functions.

10.1.8 Dynamic Function Buttons with LEDs (Left of LCD)

The function of these buttons change according to the currently selected view or menu.

- In Menu Mode they are set for menu navigation and for parameter selection
- In Meter Mode they provide Module input mute/unmute functionality in conjunction with MUTE ENABLE

The LED in the top button provides Frame fault and warning indications. The middle two buttons provide Module input mute functionality, mute indication and faults and warning indications relating to the 20000DP inputs. The bottom button is used only in Menu Mode or to lock the front panel buttons.

Please refer to the Operation Manual for further details.

10.1.9 Dynamic Function Buttons with LEDs (Right of LCD)

The function of these buttons change according to the currently selected view or menu.

- In Menu Mode they are used for menu navigation and for parameter selection
- In Meter Mode they provide output mute/unmute functionality in conjunction with MUTE ENABLE

All LEDs provides mute, clip, fault and warning indications for the power outputs channels.

10.1.10 Communication LED

The high-intensity white LED illuminates white to indicate that the Module/Frame is selected in the Lake Controller; it flashes white to indicate communication with the Lake Controller. The brightness of the LCD and communications LED can be adjusted in the Frame page of the Main Menu on the front panel.

10.1.11 Rotary Encoder

The rotary encoder is used to modify various parameters (e.g. input level) via the menu. When a menu item is selected that permits adjustment of parameter values, the ring around the rotary encoder illuminates. In Home View the encoder can be used to scroll through the Meter Views.

10.1.12 Exit

The EXIT button is used primarily while navigating the menu system in Menu Mode; pressing EXIT will return the menu up one level. In Meter Mode, pressing EXIT returns the metering display to the default Home View.

10.2 Back Panel Overview

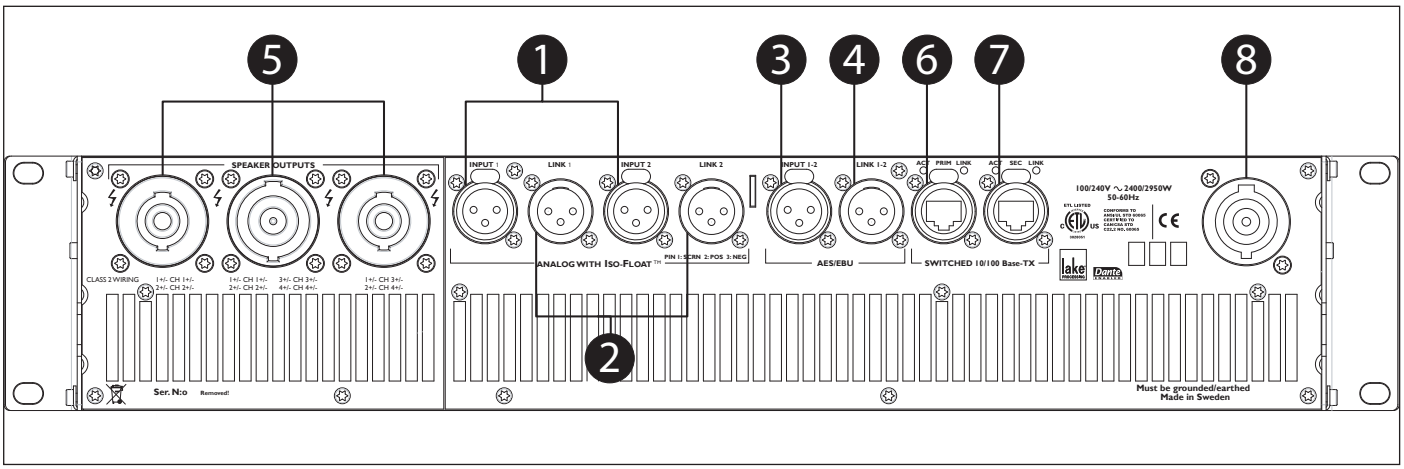

Figure 5: Back Panel Overview

10.2.1 Connectors

10.2.1.1 Analog Inputs

Analog inputs are available on two standard XLR3F latching connectors. The inputs are electronically balanced and feature Lake Iso-Float circuitry. The impedance is 20 kohms, and the inputs can accept a maximum input level of +26 dBu.

10.2.1.2 Analog Links

Two latching XLR3M connectors are fitted adjacent to the analog input connectors. These are paralleled to the input connectors to provide an unprocessed analog loop-through to feed additional amplifiers, or other equipment.

10.2.1.3 AES3 Input

A latching XLR3F connector is provided which accepts an AES3 digital audio signal. Input impedance is 110 ohms, please ensure that 110 ohm digital audio cables are used; standard XLR microphone cables are rarely suitable for reliable digital audio transmission.

NOTE

AES3 is a stereo digital format, and therefore both PLM inputs are fed via a single connector. Selection of the analog or digital inputs is made via the front panel display or control software.

10.2.1.4 AES3 Link

A latching XLR3M connector is fitted adjacent to the AES3 input connector. This is paralleled to the input connector to provide an unprocessed AES3 loop-thru to feed further amplifiers, or other equipment. An AES3 110 ohm termination load is enabled by default when the amplifier is the last unit connected within an AES3 daisy-chained system. The termination may be disabled, if desired, via the front panel menu and within the Lake Controller software.

10.2.1.5 SpeakON Connectors

The 20000DP is provided with Neutrik speakON® power output connectors, and allows for Bridge Mode operation which is activated from the Lake Controller software. Please refer to the Lake Controller Operation Manual and the 20000DP Operation Manual for further information on Bridge Mode.

The power outputs are simultaneously available on a single 8-pole speakON connector, and on two 4-pole speakON connectors. The two 4-pole connectors carry the outputs of channels 1 & 2 and 3 & 4 respectively.

Bridge Mode can be enabled via the Lake Controller software, please refer to the Lake Controller Operation Manual and to section 8.1.2 of this Operation Manual for further details on standard and Bridge Mode wiring for speakON connectors.

10.2.1.6 Primary Network Connector

The primary Neutrik RJ45 etherCON® con nection provides integration into an Ethernet control network which may include other Lake Processors and the Lake Controller software. Network connection permits full control of all functions along with real-time metering from a remote position. This device supports the Dante audio networking protocol, which allows transmission of multichannel, high-definition digital audio over the same Ethernet connection.

Use the primary connector when using a star network topology, consisting of individual Cat-5e connections between the devices and an Ethernet switch. Alternatively this connection can be used to daisy chain directly to another Lake Processor. The daisy chain topology should not be used with Dante.

For a technical reference of the Ethernet Port, please refer to the 20000DP Operation Manual. Additional information is available in the Lake Network Configuration Guide.

NOTE

The Ethernet ports operate at the Ethernet data rate of 100 Mbps, and allow straight or crossed network cables. Two LEDs above each port indicate valid network connection (LINK) and network activity (ACT).

10.2.1.7 Secondary Connector

The secondary network connector can be used to daisy-chain multiple 20000DPs, LM 26 and legacy Lake devices. Alternatively, a Dante dual-network topology can be created by connecting all secondary network connectors to a separate Ethernet switch, ensuring full redundancy in the event of a network component failure.

NOTE

Additional processor configuration is required for a dual redundant network setup. See the Lake Controller Operation Manual for further details.

For a technical reference of the Ethernet Port, please refer to the 20000DP Operation Manual. Additional information is available in the Lake Network Configuration Guide.

NOTE

When connecting multiple devices to an Ethernet network, care must be taken NOT to create a closed loop which causes network malfunction.

10.2.1.8 Mains Power Connector

The mains power AC input is via a Neutrik powerCON connector, rated at 32 A. The power supply must be connected to AC mains using a power cable with a correctly wired plug for the country of operation.

11. Signal Flow and Lake Processing

11.1 Signal Flow

Figure 5-1 and Figure 5-2 depict the audio signal flow inside a 20000DP. It is worth noting that this sophisticated device provides seven points in the signal chain where the signal level can be adjusted, muted or disconnected. Important information regarding correct setting of the gain structure can be found in the 20000DP Operation Manual.

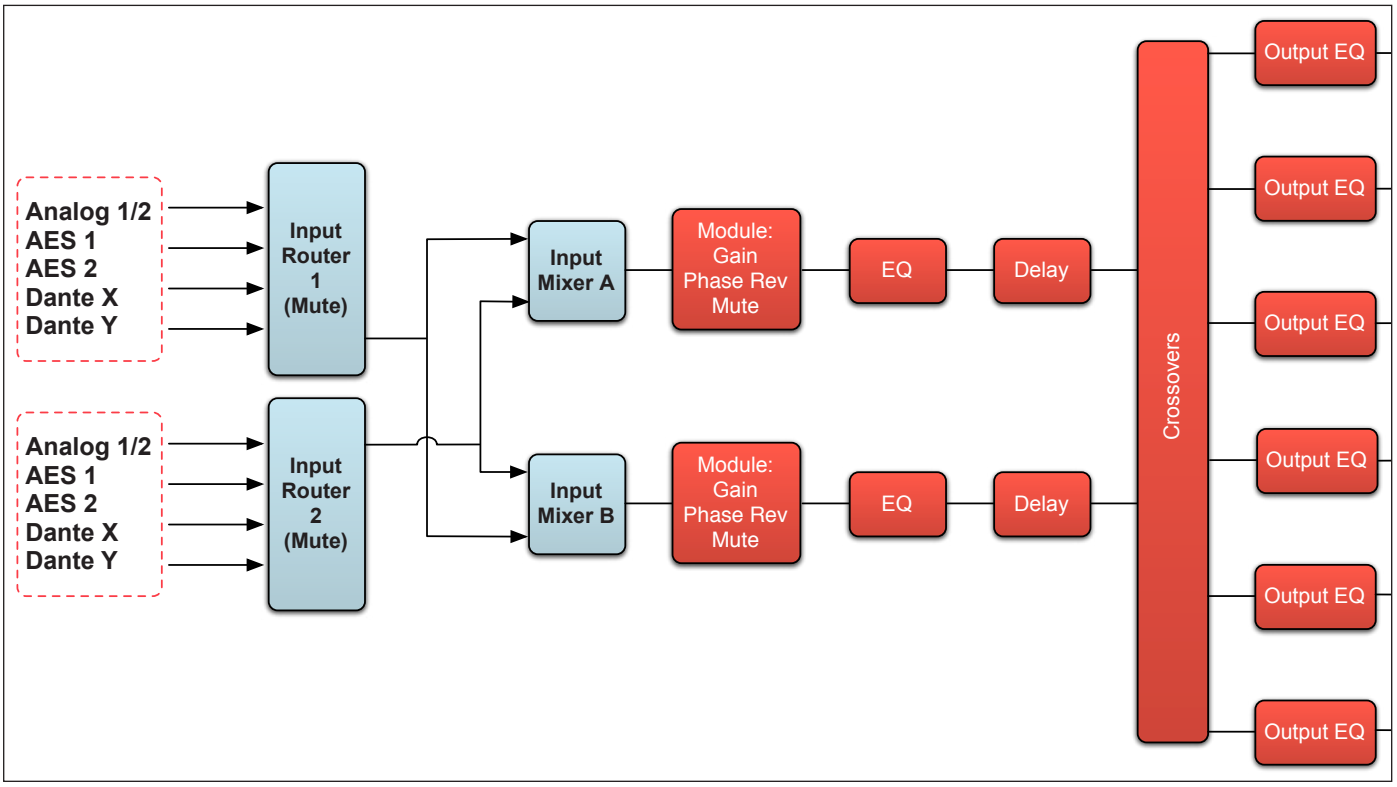

Figure 6: Signal Flow Diagram

11.2 Level Adjustments & Mute Points

Input Router Stage	– Input selection and MUTE
Input Mixer Stage	– Router ON/OFF connection to mixer and gain settings
Module Input Stage	– Mute and gain settings
Module Output Stages	– Mute and gain settings
Output Router Stage	– Output ON/OFF routoing connections
Attenuation Stage	– Power output channel mute and attenuation settings
Amp Gain Stage	– Amplifier gain control

NOTE

If the required audio signal is not passing correctly, verify the connection, mute and volume settings at all seven stages.

11.3 Power Output Section: Limiting and Sensitivity

The Current Peak Limiter (CPL) dynamically limits the drive to the power stage based on three parameters: sensed output current level, feedback from the output stage, and sensed voltage clip from the ISVPL. This ensures that power output is maintained within the design limits of the amplifier.

The adjustable Inter-Sample Voltage Peak Limiter (ISVPL) sets the 20000DP's maximum output voltage and therefore also the maximum output power. The ISVPL setting is made via MENU > MODULE > LIMITERS > ISVPL, and can also be set from the Lake Controller software.

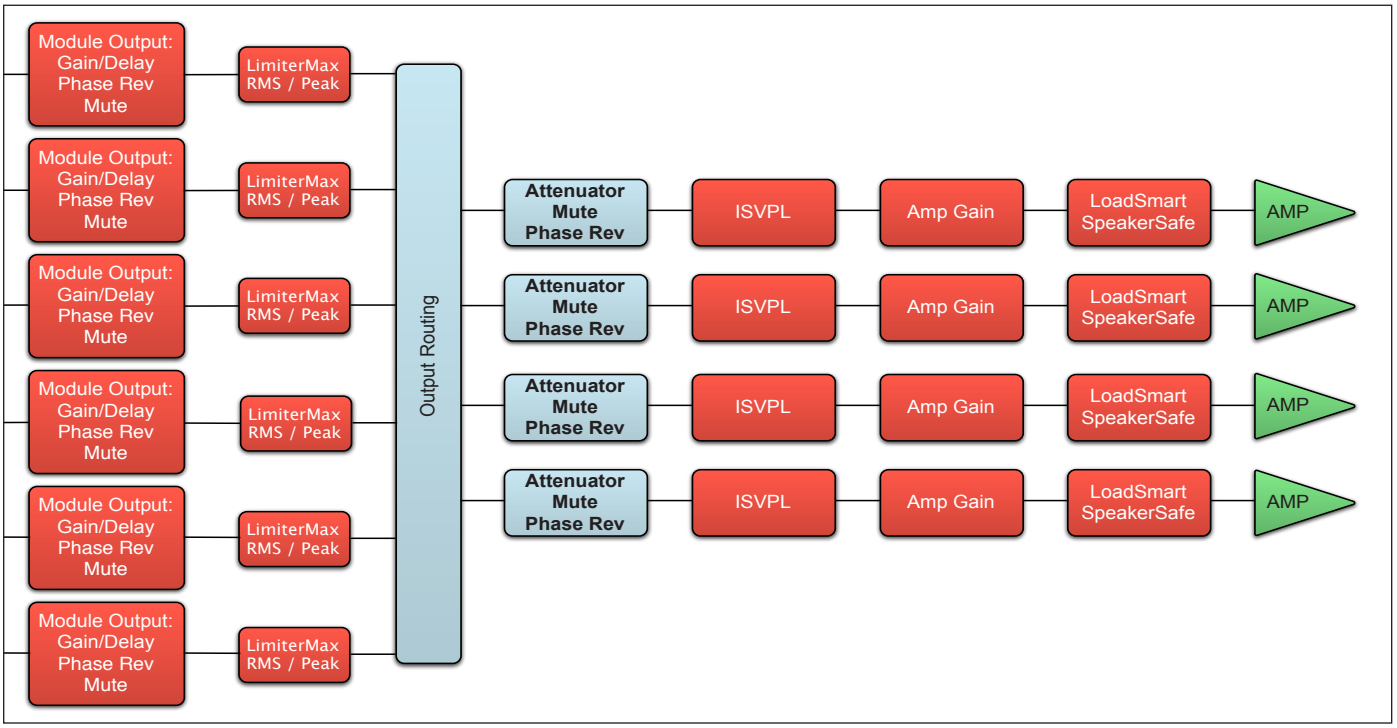

Figure 7: Signal Flow Diagram (part 2)

The sophisticated output section monitors faults and generates warnings when appropriate; warnings are displayed on the front panel of the 20000DP and also sent as messages over the control network. In the rare event that maximum ratings are significantly exceeded, the amplifier will shut down until the condition has been rectified or the incorrect setting has been readjusted. Sensing circuits also transmit local output power stage temperature, processor card temperature, and PSU temperature to the appropriate protection circuits. The table below lists analog input sensitivity in dBu and Vrms for various Amp Gain settings and maximum/minimum ISVPL settings, assuming an analog input headroom of 26 dBu.

INPUT SENSITIVITY								
ISVPL SETTING	194V		193V		153V		17.8V	
GAIN (dB)	dBu	Vrms	dBu	Vrms	dBu	Vrms	dBu	Vrms
+44	+1.0	0.87	+0.9	0.86	-1.1	0.68	-19.8	0.08
+41	+4.0	1.22	+3.9	1.22	+1.9	0.96	-16.8	0.11
+38	+7.0	1.73	+6.9	1.72	+4.9	1.36	-13.8	0.16
+35	+10.0	2.44	+9.9	2.43	+7.9	1.92	-10.8	0.22
+32	+13.0	3.45	+12.9	3.43	+10.9	2.71	-7.8	0.32
+29	+16.0	4.87	+15.9	4.84	+13.9	3.84	-4.8	0.45
+26	+19.0	6.88	+18.9	6.84	+16.9	5.42	-1.8	0.63
+22	+23.0	10.90	+22.9	10.84	+20.9	8.59	+2.2	1.00

11.4 Lake Processing and Control

As outlined in section 2.2.3, this device integrates seamlessly into the Lake Processing environment, providing all features, functionality and connectivity associated with all Lake Processors. The internal Lake Processing includes programmable crossovers, EQ, dynamics and other functions, and can be fully controlled via the supplied Lake Controller software. Additionally, many functions can be controlled or accessed directly via the front panel.

The Lake Controller Operation Manual and Lake Network Configuration Guide are supplied on the accompanying CD-ROM and additional documentation is available from the Start Menu after software installation.

11.5 Modules and Frames

11.5.1 Overview

A Frame represents one physical Lake Processor (e.g. a 20000DP). A maximum of two Modules are contained within each Frame; these are referred to as Module A and Module B. The number of Modules shown in a given Frame is dependent upon the signal processing configuration of that Frame.

Each Module can be configured as a Classic Crossover (Bessel, Butterworth, Linkwitz-Riley), as a Linear Phase Crossover, or as multiple full bandwidth Auxiliary Outputs. The default configuration is 2 x 2-Auxiliary Output Modules, providing a total of four module outputs.

11.6 LoadLibrary™ and Fingerprints

In addition to the standard loudspeaker presets (Module files), the Lake Controller also includes a set of enhanced Module files specifically for use with the 20000DP.

These supplementary Module files, known as the LoadLibrary, incorporate both Lake DSP parameters along with 20000DP specific data; LoadLibrary Module files include parameter settings for the 20000DP's Amplifier Gain and ISVPL limiter. Additionally, LoadLibrary loudspeaker types may also include data relating to the electrical characteristics of a particular loudspeaker.

Electrical characteristic data is used to enable load verification (LoadSmart) and monitoring facilities (SpeakerSafe) to be performed on the 20000DP. This data set is termed a Fingerprint. When a 20000DP-specific loudspeaker type is loaded, its Fingerprint load characteristics are included. These load characteristics are stored in a file with a ".mdl" suffix and are loaded simultaneously with the module file.

LoadLibrary Modules and standard Module files are cross-compatible, although when a LoadLibrary Module is loaded into a legacy Lake product the extra data within it is ignored.

11.7 Super Modules

Super Modules allow control of multiple Modules of the same type, distributed across multiple Frames, as a single entity within the Lake Controller software. A change made in the Super Module is replicated across all assigned Modules, resulting in improved efficiency in system configuration and a reduction of on-screen icons within the Lake Controller software.

The key benefit of this feature is the ability to connect and control crossovers, levels and EQ across multiple hardware devices simultaneously from the Lake Controller. For example, one device may be driving sub and low-frequency speakers, while another device controls mid-range and hi-frequency drivers. Using a single adjustment the crossover points between the two devices can be changed simultaneously.

Please refer to the Lake Controller Operation Manual for further information regarding Super Modules.

11.8 Loudspeaker Crossover Configuration Overview

The Lake Processing system may be configured with up to two inputs and up to six Module outputs, although the number of power outputs will be either two or four depending on the PLM model being used. To make use of the extra processing channels, multiple hardware devices may be connected together using the Super Module feature as summarized in section 5.3.3.

Each set of processing elements is referred to as a Module and can be configured as crossovers, full bandwidth auxiliary outputs, or a combination of the two. The relationship between inputs and outputs is defined via the Lake Controller or via the front panel Input Config Menu.

The Lake Processing system provides two distinct categories of crossovers:

- Infinite Impulse Response filters (IIR) such as the classic Bessel, Butterworth or Linkwitz-Riley types; these are available with slopes ranging from 6 dB/octave to 48 dB/octave.
- Finite Impulse Response filters (FIR) providing zero phase shift with steep transition slopes at the crossover frequencies. These are also referred to as Linear Phase Crossovers.

11.9 Files and Presets

The Lake system provides various methods for storing and recalling Module, Frame, or system-wide data. A overview is provided below; for further information please refer to the Lake Controller Operation Manual.

11.9.1 Module, System and Sub-System Configuration Files

Module, System and Sub-System Configuration files are stored on the Lake Controller PC, and data is passed across the network when recalling or storing these type of files.

- A Module file is the smallest set of data that can be stored and recalled; it contains crossover, gain, delay, and limiter information for an individual loudspeaker. A Module file may be recalled into other Lake devices. It is not possible to store a Module File directly on the hardware device.
- A System or Sub-System Configuration File contains a set of Module file information in addition to Frame related information such as I/O routing, along with Group control information.

11.9.2 Frame and System Presets

This device allows the complete processor configuration to be stored as a Frame Preset on the hardware unit itself. Presets can be recalled via the front panel (please refer to section 7.11.7) or via the Lake Controller software (please refer to the Lake Controller Operation Manual).

A maximum of 100 Frame Presets can be stored on this device. The data within a Frame Preset includes the configurations of both Modules in the Frame, including all levels, crossover, EQ, input mixer, output routing, and all other Module, Frame and Group parameters. As Frame Presets are stored in the device, complete processor configurations may be recalled without the need to connect the device to a PC.

Using the System Presets function in the Lake Controller, entire system configurations can be stored and recalled across a network of LM 26, PLM, Mesa Quad EQ, Contour Pro 26, and Dolby Lake Processors. This enables fast retrieval and switching of entire system configurations as minimal data is being sent between the Controller and Processors.

12. Lake Controller Software

12.1 Introduction

This section describes installation of the Lake Controller software, input and output connections, basic functionality, and setup instructions. The information provides a basic level of understanding of the system architecture along with configuration instructions for a basic system application. The tutorial in section 6.4 provides a step-by-step example for configuring this device for use with a generic professional sound system. Please refer to the documentation listed in section 2.3, which provides detailed information on all features and functionality.

12.2 Lake Processing and Control

The 20000DP contains an integrated Lake loudspeaker management system, providing crossovers, EQ, dynamics and other functions. Primary control is via the supplied Lake Controller software, although many functions can be accessed via the front panel interface. The Lake Controller software allows all parameters to be configured, controlled and monitored; please refer to the Lake Controller Operation Manual for further details. The Lake Network Configuration Guide provides information regarding connection of one or more Lake Processors to a PC via an Ethernet network.

12.3 Installing the Lake Controller Software

12.3.1 Overview

The supplied memory stick contains the Lake Controller software package. This should be installed on any PCs that will be used to control and monitor the Lake Processor network. In a situation where multiple networked Lake Processors are involved, this will generally be a Tablet PC.

The minimum recommended computer specifications are:

- 1 GHz or faster
- 512 MB RAM or greater
- 128 MB video RAM or greater
- Windows XP, Windows Vista or Windows 7
- DirectX® 8.1 or later
- 100 Base-T wired Ethernet adapter and/or 802.11 wireless Ethernet adapter

When using large Lake processor systems it is recommended that a computer exceeding the minimum specifications is used. If you are unsure about installing PC software, please contact an IT specialist.

12.3.2 Software Installation

The Lake Controller software is installed by allowing the auto-setup routine to run. Select INSTALL then LAKE CONTROLLER SOFTWARE on the software installation screen that is displayed. For most installations, the suggested default installation paths can be accepted.

The latest software can be downloaded from http:// labgruppen.com/index.php/support/software_firmware/ after completing an online registration form. It is recommended that all users verify they are using the latest version of software.

Once the software is installed, the application is launched by double-tapping the LAKE icon on the Windows desktop. Please refer to the Lake Controller Operation Manual for further details on software installation and PC configuration.

12.3.3 Software and Firmware updates

Regular software and firmware updates are available for the Lake Controller software and 20000DP amplifier. Please check for updates regularly to ensure you have the latest features and improvements.

Registered users will receive email notification of updates as they become available. The latest updates are also available from http://www.labgruppen.com/index.php/support/software_firmware. Please refer to the Lake Controller Operation Manual for further details on the firmware upgrade procedure.

12.3.4 Ethernet Configuration

This device provides control, monitoring and digital audio functionality via an Ethernet network. For further information on the setup and configuration of an Ethernet network, please refer to the Lake Controller Operation Manual and the Lake Network Configuration Guide.

12.4 Gain Structure

The 20000DP architecture provides gain adjustments at various points in the signal path and therefore, various places for muting and level adjustment. Each mute or gain adjustment point serves a different purpose.

Detailed information on signal flow and gain structure is available in the 20000DP Operation Manual. The signal flow diagrams in chapter 5 (Figure 5-1 and Figure 5-2) are useful signal path references, and the following sections describe the various adjustment points, all of which are available via the Lake Controller software.

12.4.1 Input Headroom (Analog Inputs Only)

Input Headroom should be set to 12 dBu if the source can be limited to 12 dBu; otherwise it should be set to 26 dBu. This setting does not affect the other gain stages, or the overall noise floor; it allows control of the appropriate headroom at the input stage only.

12.4.2 Input Mixer

Input Mixer gains can remain at 0.00 dB for most configurations; if only one input channel is used per Module, the other can be set to -INF.

12.4.3 Module Input Gain

Input Gain is used to adjust the level between different speaker cabinets in the system. This gain can remain at 0.00 dB unless a lower level is required for the cabinet/s driven by this Module.

12.4.4 Module Output Gain (Levels)

Factory and User Gain are provided for each Module output. These two stages provide a level of security and control for the system designer (Factory) and a further level of adjustment for the user (User), both of which combine to balance the level between frequency bands in a multi-way crossover.

Generally, output gain values are configured within a Module / loudspeaker preset file and should not need to be adjusted further.

12.4.5 Attenuator

An attenuator gain adjustment is provided for each power output channel in the 20000DP. This control replaces the traditional volume control found on conventional amplifiers and should typically be left at 0 dB during use.

12.4.6 Amp Gain

The Amp Gain corresponds to the gain adjustment in a conventional separate loudspeaker processor and amplifier system. When using a pre-defined Module loudspeaker preset file, the Amp Gain settings will normally remain as defined in the file. The limiter and output gain settings of the Module were configured with this gain setting and will not be automatically compensated if changes are made. This configuration scheme, though unusual, allows for compatibility with legacy Dolby / Lake products.

12.5 Gain / Level Optimization

12.5.1 Maximize Volume Capability

To maximize the volume capability of the device, ensure there is sufficient headroom in the signal path to avoid clipping before the limiters engage. It must be possible to achieve enough gain through the device to engage the limiters and realize a high average SPL. As an optimal setting, allow for a headroom of 10 dB or more for all channels; the simplest way to accomplish this is to increase the Module input gain.

12.5.2 Minimize Noise

To help provide the best volume to noise ratio, use an AES or Dante digital input signal wherever possible. If using analog inputs, ensure that unused or unnecessarily high headroom is not introduced at the input to the device. If full or high average power is not required, the Module input gain may be reduced.

13. Warranty and Support

13.1 General

This product is manufactured by Lab.gruppen, and it is warranted to be free from any defects caused by components or factory workmanship, under normal use and service, for a period of three (3) years from date of purchase from an authorized Lake dealer.

If the product fails to perform as specified during the warranty period, Lab.gruppen will undertake to repair, or at its option, replace this product at no charge to its owner, provided the unit is returned undamaged, shipping prepaid, to an authorized service facility or to the factory.

This warranty shall be null and void if the product is subjected to: repair work or alteration by a person other than those authorized by us; mechanical damage including shipping accidents; war, civil insurrection, misuse, abuse, operation with incorrect AC voltage; incorrect connections or accessories; operation with faulty associated equipment; or exposure to inclement weather conditions. Damage due to normal wear and tear is not covered by the warranty. Units on which the serial number has been removed or defaced will not be eligible for warranty service.

Lab.gruppen shall not be responsible for any incidental or consequential damages. Lab.gruppen's responsibility is limited to the product itself. Lab.gruppen takes no responsibility for any loss due to cancellation of any events, or rent of replacement equipment or costs due to a third party's or customer's loss of profit, or any other indirect cost or losses however incurred.

Lab.gruppen reserves the right to make changes or improvements in design or manufacturing without assuming any obligation to change or improve products previously manufactured.

This warranty is exclusive, and no other warranty is expressed or implied. This warranty does not affect the customer's statutory rights.

13.2 International Warranties

Please contact your supplier or distributor for this information, as rights and disclaimers may vary from country to country.

13.3 Technical Assistance and Service

13.3.1 International Service

If your Lab.gruppen product requires repair, contact your Lab.gruppen dealer or distributor, or contact Lab.gruppen by fax or email to obtain the location of the nearest authorized service centre.

14. Maintenance

14.1 Removal of the drive units

Remove the screws securing the top and bottom butterfly plates. Remove the screws securing the mid/high section and carefully lift out and away from the cabinet. Disconnect all cables and make a note of the polarity and location for later reconnection. The high frequency compression drivers, high-mid drivers and low-mid drivers can now all be accessed for servicing.

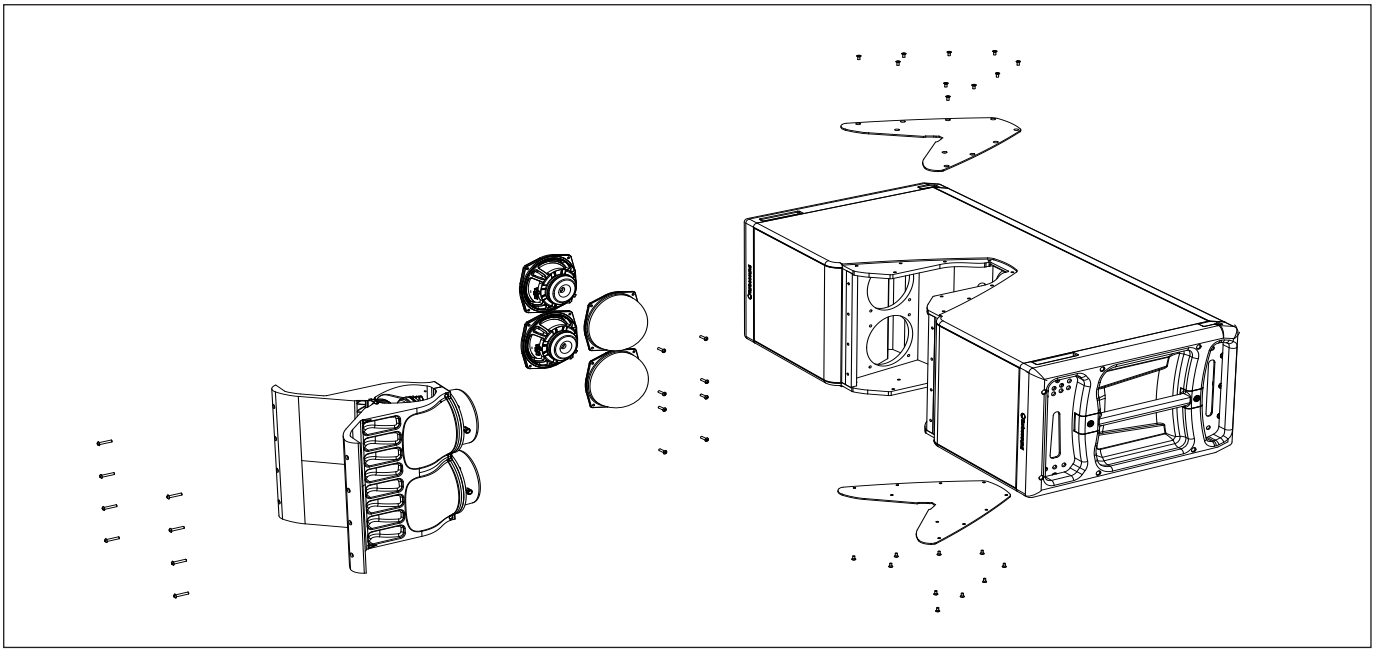

Remove the screws holding the rear driver doors in place and remove the access doors. The low frequency drivers can now be accessed for servicing.

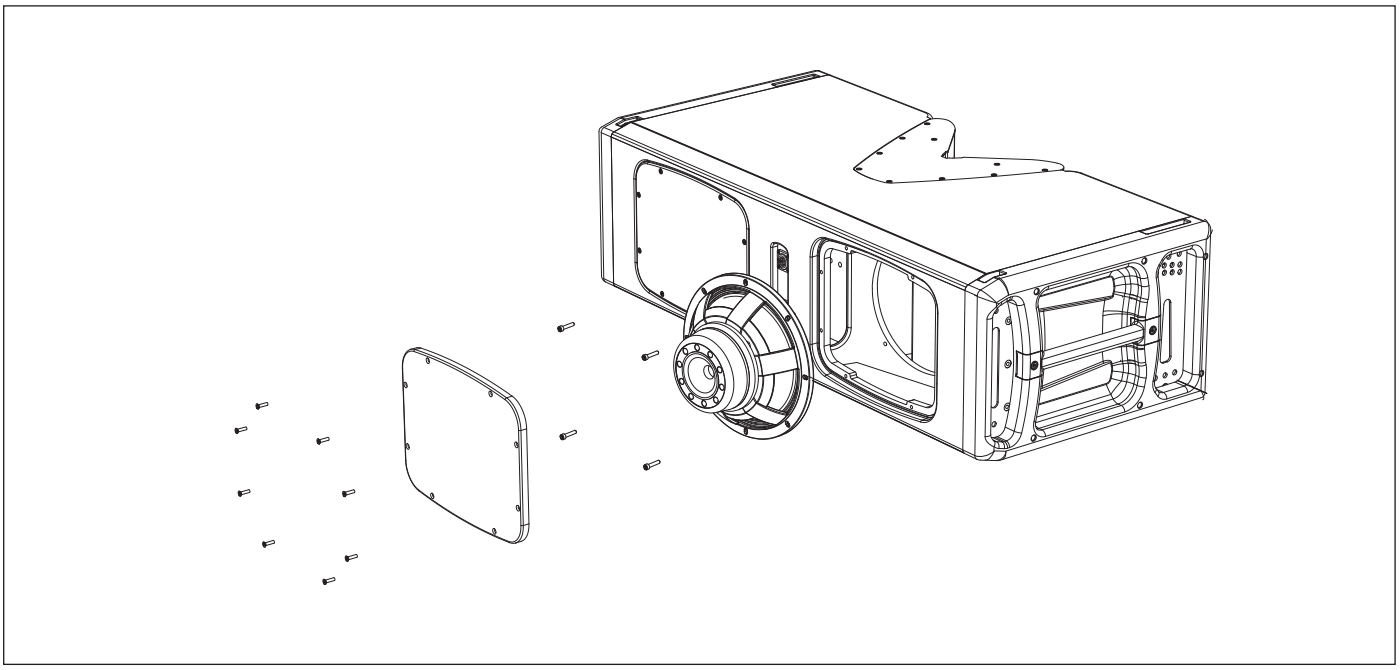

15. Technical Specifications

	TFS-900H	TFS-900B
DIMENSIONS	360mm x 1240mm x 570mm	599.5mm x 1246.5mm x 1140mm
NET WEIGHT	102kg (224.4 lbs)	154kg (338.8lbs)
COMPONENTS	2 x 12” (305mm) bass driver 4 x 6.5” (165mm) low drivers 2 x 6.5” (165mm) mid drivers on Dendritic device 3 x 1” (25mm) high drivers on Dendritic device	2 x 18” LF drivers
FREQUENCY RESPONSE	70Hz - 18kHz ±3dB, 60Hz - 20kHz ±10dB	35Hz - 150Hz ±3dB, 30Hz - 200Hz ±10dB
NOMINAL DISPERSION	90° horizontal, vertical dispersion dependent on array	
POWER HANDLING	Optimised for 20000DP	Optimised for 20000DP
SENSITIVITY (FULL SPACE)	High: 111dB, Mid: 109dB, Low: 104dB, Bass: 10dB	107dB
CALCULATED MAXIMUM SPL (PER ELEMENT WHEN USED IN AN ARRAY)	147.5dB peak	151dB peak
NOMINAL IMPEDANCE	High: 18Ω, Mid: 12Ω, Low: 8Ω, Bass: 8Ω	2 x 8Ω
CONSTRUCTION	15mm (5/8”) birch plywood finished in TourTough IP54	18mm (3/4”) birch plywood painted in TourTough IP54
GRILLE	Stainless steel IP54	Stainless steel IP54
CONNECTORS	2 x Speakon NL8, one band per pair	2 x Speakon NL4, one driver per pair
SPARES AND ACCESSORIES	LS-1229 12” bass loudspeaker LS-6510 6.5” low frequency loudspeaker LS-6507 6.5” mid frequency loudspeaker CD-115 1” high frequency compression driver	

NOTES

NOTES